SD060

Liquid Cooled Diesel Engine Generator Sets

Standby Power Rating
60KW 60 Hz / 60KVA 50 Hz

Prime Power Rating
48KW 60 Hz /48KVA 50 Hz

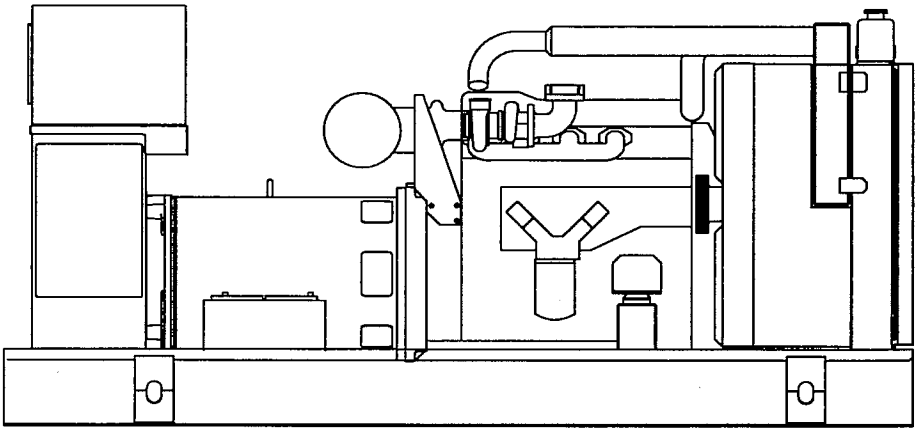

Power Matched
GENERAC 3.9DTA ENGINE
Turbocharged/Aftercooled

FEATURES

- **INNOVATIVE DESIGN & PROTOTYPE TESTING** are key components of GENERAC'S success in "IMPROVING POWER BY DESIGN." But it doesn't stop there. Total commitment to component testing, reliability testing, environmental testing, destruction and life testing, plus testing to applicable CSA, NEMA, EGSA, and other standards, allows you to choose GENERAC POWER SYSTEMS with the confidence that these systems will provide superior performance.

- **TEST CRITERIA:**
  - ✓ PROTOTYPE TESTED
  - ✓ SYSTEM TORSIONAL TESTED
  - ✓ ELECTRO-MAGNETIC INTERFERENCE
  - ✓ NEMA MG1 EVALUATION
  - ✓ MOTOR STARTING ABILITY
  - ✓ SHORT CIRCUIT TESTING
  - ✓ UL 2200 COMPLIANCE AVAILABLE

- **SOLID-STATE, FREQUENCY COMPENSATED VOLTAGE REGULATION.** This state-of-the-art power maximizing regulation system is standard on all Generac models. It provides optimized FAST RESPONSE to changing load conditions and MAXIMUM MOTOR STARTING CAPABILITY by electronically torque-matching the surge loads to the engine.

- **SINGLE SOURCE SERVICE RESPONSE** from Generac's dealer network provides parts and service know-how for the entire unit, from the engine to the smallest electronic component. You are never on your own when you own an GENERAC POWER SYSTEM.

- **ECONOMICAL DIESEL POWER.** Low cost operation due to modern diesel engine technology. Better fuel utilization plus lower cost per gallon provide real savings.

- **LONGER ENGINE LIFE.** Generac heavy-duty diesels provide long and reliable operating life.

- **GENERAC TRANSFER SWITCHES, SWITCHGEAR AND ACCESSORIES.** Long life and reliability is synonymous with GENERAC POWER SYSTEMS. One reason for this confidence is that the GENERAC product line includes its own transfer systems, accessories, switchgear and controls for total system compatibility.

GENERAC®
POWER SYSTEMS, INC.

APPLICATION & ENGINEERING DATA

GENERATOR SPECIFICATIONS

TYPE ..... Four-pole, revolving field
ROTOR INSULATION ..... Class H
STATOR INSULATION ..... Class H
TOTAL HARMONIC DISTORTION ..... <3%
TELEPHONE INTERFERENCE FACTOR (TIF) ..... <50
ALTERNATOR ..... Self-ventilated and drip-proof
BEARINGS (PRE-LUBED & SEALED) 1
COUPLING ..... Direct, Flexible Disc
LOAD CAPACITY (STANDBY) 100%
LOAD CAPACITY (PRIME) 110%

NOTE: Emergency loading in compliance with NFPA 99, NFPA 110. Generator rating and performance in accordance with ISO8528-5, BS5514, SAE J1349, ISO3046 and DIN6271 standards.

EXCITATION SYSTEM

❒ BRUSHLESS ..... Magnetically coupled DC current ✓
Eight-pole exciter w/ battery-driven field boost ✓
Mounted outboard of main bearing ✓
❒ PERMANENT MAGNET EXCITER ..... Eighteen pole exciter ✓
Magnetically coupled DC current ✓
Mounted outboard of main bearing ✓
REGULATION ..... Solid-state ✓
±1% regulation ✓

GENERATOR FEATURES

- Four pole, revolving field generator, directly connected to the engine shaft through a heavy-duty, flexible disc for permanent alignment.
- Generator meets the temperature rise standards for class "F" insulation as defined by NEMA MG1-32.6, while the insulation system meets the requirements for the higher class "H" rating.
- All prototype models have passed a three-phase symmetrical short circuit test to assure system protection and reliability.
- All prototype models are tested for motor starting ability by measuring the instantaneous voltage dip with a waveform data acquisition system.
- All models utilize an advanced wire harness design for reliable interconnection within the circuitry.
- Magnetic circuit, including amortisseur windings, tooth and skewed stator design, provides a minimal level of waveform distortion and an electromagnetic interference level which meets accepted requirements for standard AM radio, TV, and marine radio telephone applications.
- Voltage waveform deviation, total harmonic content of the AC waveform, and T.I.F. (Telephone Influence Factor) have been evaluated to acceptable standards in accordance with NEMA MG1-32.
- Alternator is self-ventilated and drip-proof constructed.
- Fully life-tested protective systems, including "field circuit and thermal overload protection" and optional main-line circuit breakers capable of handling full output capacity.
- System Torsional acceptability confirmed during Prototype Testing.

ENGINE SPECIFICATIONS

MAKE ..... GENERAC
MODEL 3.9DTA
CYLINDERS ..... 4 in-line
DISPLACEMENT ..... 3.9 Liter (238 cu.in.)
BORE ..... 104 mm (4.09 in.)
STROKE ..... 115 mm (4.52 in.)
COMPRESSION RATIO 16.5:1
INTAKE AIR ..... Turbocharged/Aftercooled
NUMBER OF MAIN BEARINGS 5
CONNECTING RODS ..... 4-Drop Forged Steel
CYLINDER HEAD ..... Cast Iron Overhead Valve
PISTONS ..... 4- Aluminum Alloy
CRANKSHAFT ..... Hardened, Steel

VALVE TRAIN

LIFTER TYPE ..... Solid
INTAKE VALVE MATERIAL ..... Special Heat Resistant Steel
EXHAUST VALVE MATERIAL ..... Special Heat Resistant Steel
HARDENED VALVE SEATS ..... Replaceable

ENGINE GOVERNOR

❒ MECHANICAL (Gear Driven) ..... Standard
FREQUENCY REGULATION, NO-LOAD TO FULL LOAD 5.0%
STEADY STATE REGULATION ..... ±0.33%
❒ ELECTRONIC ..... Optional
FREQUENCY REGULATION, NO-LOAD TO FULL LOAD ..... Isochronous
STEADY STATE REGULATION ..... ±0.25%

LUBRICATION SYSTEM

TYPE OF OIL PUMP ..... Gear
OIL FILTER ..... Full flow, Cartridge
CRANKCASE CAPACITY ..... 18 Litres (19 qts.)
OIL COOLER ..... Oil to water

COOLING SYSTEM

TYPE OF SYSTEM ..... Pressurized, Closed Recovery
WATER PUMP ..... Pre-Lubed, Self-Sealing
TYPE OF FAN ..... Pusher
NUMBER OF FAN BLADES 7
DIAMETER OF FAN ..... 457 mm (18 in.)
COOLANT HEATER ..... 120V, 1800 W

FUEL SYSTEM

FUEL ..... #2D Fuel (Min Cetane #40)
(Fuel should conform to ASTM Spec.)
FUEL FILTER ..... Single Cartridge
FUEL INJECTION PUMP ..... Stanadyne
FUEL PUMP ..... Mechanical
INJECTORS ..... Multi-Hole, Nozzle Type
ENGINE TYPE ..... Direct Injection
FUEL LINE (Supply) ..... 7.94 mm (0.31 in.)
FUEL RETURN LINE ..... 6.35 mm (0.25 in.)
STARTING AID ..... Glow Plugs

ELECTRICAL SYSTEM

BATTERY CHARGE ALTERNATOR ..... 30 Amps at 24 V
STARTER MOTOR ..... 24 V
RECOMMENDED BATTERY ..... (2)—12 Volt, 90 A.H., 4DLT
GROUND POLARITY ..... Negative

Rating definitions - Standby: Applicable for supplying emergency power for the duration of the utility power outage. No overload capability is available for this rating. (All ratings in accordance with BS5514, ISO3046 and DIN6271). Prime (Unlimited Running Time): Applicable for supplying electric power in lieu of commercially purchased power. Prime power is the maximum power available at variable load. A 10% overload capacity is available for 1 hour in 12 hours. (All ratings in accordance with BS5514, ISO3046, ISO8528 and DIN6271).

GENERAC®
POWER SYSTEMS, INC.

SD060

OPERATING DATA

	STANDBY		PRIME	
	SD060		SD060	
GENERATOR OUTPUT VOLTAGE/KW-60Hz	Rated AMP		Rated AMP	
120/240V, 1-phase, 1.0 pf	60	250	48	200
120/208V, 3-phase, 0.8 pf (NOTE: Consult your Generac dealer for additional voltages.)	60	208	48	166
120/240V, 3-phase, 0.8 pf	60	180	48	144
277/480V, 3-phase, 0.8 pf	60	90	48	72
600V, 3-phase, 0.8 pf	60	72	48	58
GENERATOR OUTPUT VOLTAGE/KVA-50Hz	Rated AMP		Rated AMP	
110/220V, 1-phase, 1.0 pf	48	218	38	172
115/200V, 3-phase, 0.8 pf (NOTE: Consult your Generac dealer for additional voltage)	60	173	48	138
100/200V, 3-phase, 0.8 pf	60	173	48	138
231/400V, 3-phase, 0.8 pf	60	87	48	69
480V, 3-phase, 0.8 pf	60	72	48	58
MOTOR STARTING KVA				
Maximum at 35% instantaneous voltage dip	120/208/240V	277/480V	120/208/240V	277/480V
with standard alternator; 50/60 Hz	100/120	117/141	100/120	117/141
with optional alternator; 50/60 Hz	234/281	276/331	234/281	276/331
FUEL				
Fuel consumption—60 Hz — Load	100%	80%	100%	80%
gal./hr.	4.3	3.6	3.6	3.0
liters/hr.	16.3	13.5	13.6	11.3
Fuel consumption—50 Hz — gal./hr.	3.6	3.0	3.0	2.5
liters/hr.	13.5	11.2	11.3	9.3
Fuel pump lift				
COOLING				
Coolant capacity — System - lit. (US gal.)	15.9 (4.2)		15.9 (4.2)	
Engine - lit. (US gal.)	6.4 (1.7)		6.4 (1.7)	
Radiator - lit. (US gal.)	9.5 (2.5)		9.5 (2.5)	
Coolant flow/min. — 60 Hz - lit. (US gal.)	128 (34)		128 (34)	
50 Hz - lit. (US gal.)	107 (28)		107 (28)	
Heat rejection to coolant 60 Hz full load — BTU/hr.	170,900		136,700	
Heat rejection to coolant 50 Hz full load — BTU/hr.	142,400		113,900	
Inlet air to radiator — 60 Hz - m^3/min. (cfm)	204 (7,200)		204 (7,200)	
50 Hz - m^3/min. (cfm)	170 (6004)		170 (6004)	
Max. operating air temp to radiator *see note — °C (°F)	60 (140)		60 (140)	
Max. operating ambient temp *see note — °C (°F)	50 (122)		50 (122)	
COMBUSTION AIR REQUIREMENTS				
Flow at rated power — 60 Hz - cfm	209		168	
50 Hz - m^3/min.	4.7		3.8	
EXHAUST				
Exhaust flow at rated output — 60 Hz - m^3/min. (cfm)	15.5 (549)		12.4 (439)	
50 Hz - m^3/min. (cfm)	12.3 (434)		10 (353)	
Max recommended back pressure — "Hg	1.5		1.5	
Exhaust temperature 60 Hz (full load) — °C (°F)	524 (975)		459 (858)	
Exhaust outlet size	3"		3"	
ENGINE				
Rated RPM — 60 / 50 Hz	1800 / 1500		1800 / 1500	
HP at rated KW — 60 / 50 Hz	92 / 73		74 / 59	
Piston speed — 60 Hz - m/min. (ft./min.)	414 (1358)		414 (1358)	
50 Hz - m/min. (ft./min.)	345 (1132)		345 (1132)	
BMEP — 60 Hz - psi	170		138	
50 Hz - psi	161		130	
POWER ADJUSTMENTS FOR AMBIENT CONDITIONS				
Temperature — -4.5% for every 10°C above - °C	43		43	
-2.5% for every 10°F above - °F	110		110	
Altitude — -0.8% for every 100 m above - m	1829		1829	
-2.5% for every 1000 ft. above - ft.	6000		6000	

* Note: Values given are maximum temperatures to which power adjustments can be applied. Consult your Generac Power Systems representative if operating conditions exceed these maximums.

STANDARD ENGINE & SAFETY FEATURES

SD060

- High Coolant Temperature Automatic Shutdown
- Low Coolant Level Automatic Shutdown
- Low Oil Pressure Automatic Shutdown
- Overspeed Automatic Shutdown (Solid-state)
- Crank Limiter (Solid-state)
- Oil Drain Extension
- Radiator Drain Extension
- Factory-Installed Cool Flow Radiator
- Closed Coolant Recovery System
- UV/Ozone Resistant Hoses
- Rubber-Booted Engine Electrical Connections
- Secondary Fuel Filter
- Fuel Lockoff Solenoid
- Stainless Steel Flexible Exhaust Connection
- Battery Charge Alternator
- Battery Cables
- Battery Tray
- Vibration Isolation of Unit to Mounting Base
- 12 Volt, Solenoid-activated Starter Motor
- Air Cleaner
- Fan Guard
- Control Console H100
- Radiator Duct Adapter
- Coolant Heater

OPTIONS

OPTIONAL COOLING SYSTEM ACCESSORIES
- 208/240V Coolant Heater

OPTIONAL FUEL ACCESSORIES
- Flexible Fuel Lines
- UL Listed Fuel Tanks
- Base Tank Low Fuel Alarm
- Primary Fuel Filter
- Primary Fuel Filter with Heater

OPTIONAL EXHAUST ACCESSORIES
- Critical Exhaust Silencer (Standard on enclosed gensets)

OPTIONAL ELECTRICAL ACCESSORIES
- Battery, 12 Volt, 135 A.H., 4DLT
- 2A Battery Charger
- 10A Dual Rate Battery Charger
- Battery Heater

OPTIONAL ALTERNATOR ACCESSORIES
- Alternator Upsizing
- Alternator Strip Heater
- Alternator Tropicalization
- Voltage Changeover Switch
- Main Line Circuit Breaker

CONTROL CONSOLE OPTIONS
- Digital Controller H100 (Bulletin 0172110SBY)

ADDITIONAL OPTIONAL EQUIPMENT
- Automatic Transfer Switch GTS or HTS
- Isochronous Governor
- 20 Light Remote Annunciator
- Remote Relay Panels
- Unit Vibration Isolators (Pad/Spring)
- Oil Make-Up System
- Oil Heater
- 5 Year Warranties
- Export Boxing
- GenLink® Communications Software

OPTIONAL ENCLOSURE
- Weather Protective
- Sound Attenuated
- Aluminum and Stainless Steel
- Enclosed Muffler

Distributed by:

Design and specifications subject to change without notice. Dimensions shown are approximate. Contact your Generac dealer for certified drawings. DO NOT USE THESE DIMENSIONS FOR INSTALLATION PURPOSES.

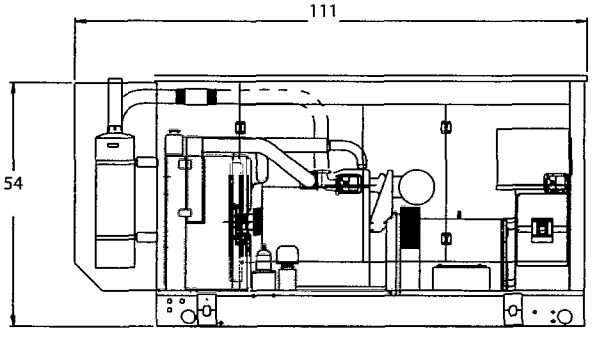

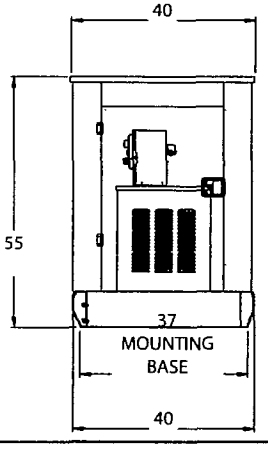

mm [in]

GENERAC POWER SYSTEMS, INC. • P.O. BOX 8 • WAUKESHA, WI 53187
262/544-4811 • FAX 262/544-4851

Bulletin 0166800SBY / Printed in USA 10.02, rev: 08.05

© 2005 Generac Power Systems, Inc. All rights reserved. All specifications subject to change without notice.