LOCATION MAP
NOT TO SCALE

NOTES:

1. PROPERTY OWNERS: DOUGLAS R. & DIANE S. HAGGETT
7523 VT. ROUTE 14
BROOKFIELD, VT 05036

2. APPLICANT: VERMONT RSA LIMITED PARTNERSHIP AND CELLCO PARTNERSHIP
EACH D/B/A VERIZON WIRELESS
C/O BRIAN SULLIVAN, ESQ., MURPHY SULLIVAN KRONK
P.O. BOX 4485, 275 COLLEGE STREET
BURLINGTON, VT 05401-4485 802-861-7000

3. ENGINEER: DUBOIS & KING, INC., 6 GREEN TREE DRIVE
SOUTH BURLINGTON, VT 05403 802-878-7661

4. ADD PROPOSED USE: VERIZON WIRELESS: UNATTENDED TELECOMMUNICATIONS FACILITY. (1-2) VISITS PER MONTH BY TECHNICIAN. NO WATER OR SEWER SERVICES REQUIRED.

5. PROPERTY BOUNDARIES SHOWN ARE APPROXIMATE AS PROVIDED BY TOWN OF BROOKFIELD TAX MAPS. DUBOIS & KING, INC. DID NOT PERFORM A BOUNDARY SURVEY.

6. DUBOIS & KING, INC. DID NOT PERFORM A TOPOGRAPHIC SURVEY.

7. EXISTING LAYOUT BASED ON PLANS BY DEWBERRY ENGINEERS INC. DATED MAY 30, 2013.

LEGEND

- APPROXIMATE PROPERTY LINE
- EROSION CONTROL SILT FENCE
- CONSTRUCTION FENCE
- UET — UNDERGROUND ELEC & TEL LINE
- X — CHAIN LINK FENCE
- EXISTING OVERHEAD UTILITY POLE
- 502 — EXISTING 2' CONTOUR LINE
- 500 — EXISTING 10' CONTOUR LINE
- STONEWALL
- EXISTING TREE LINE
- PROPOSED TREE LINE

POSTED SPEED LIMIT = 35 M.P.H.

AREA OF CLEARING = 0 S.F.

AREA OF DISTURBANCE = 891 S.F.

GRAPHIC SCALE
500 0 250 500 1000 2000
(IN FEET)
1 inch = 500 ft. AT 24X36
HALF SIZE AT 11X17

DuBois & King inc.
ENGINEERING • PLANNING •
MANAGEMENT • DEVELOPMENT
6 GREEN TREE DRIVE
SO. BURLINGTON, VT 05403
TEL (802) 878-7661
FAX (866) 783-7101
www.dubois-king.com
RANDOLPH, VT
SPRINGFIELD, VT
BEDFORD, NH
© Copyright 2015 Dubois & King Inc.

PROFESSIONAL SEAL

NOT FOR CONSTRUCTION PRELIMINARY PLANS

NO.	DATE	DESCRIPTION	BY	CK'D

verizon wireless

PROJECT ID: 20130925590
PROJECT TYPE:
LOCATION CODE: 271257

BROOKFIELD SOUTH

2382 RIDGE ROAD
BROOKFIELD, VT
05036

SHEET TITLE

OVERALL
SITE PLAN

PERMIT PLANS

DRAWN BY	DATE
JWP	MAY. 2015
CHECKED BY	D&K PROJECT #
LJH	422151P
PROJ. ENG	D&K ARCHIVE #
LJH	8120

SHEET NUMBER

C-1

I:\422151P VZW Brookfield South\dwg\Permit Plans\C2215\SPD3 Ridge Road.dwg 7/17/2015 2:58 PM

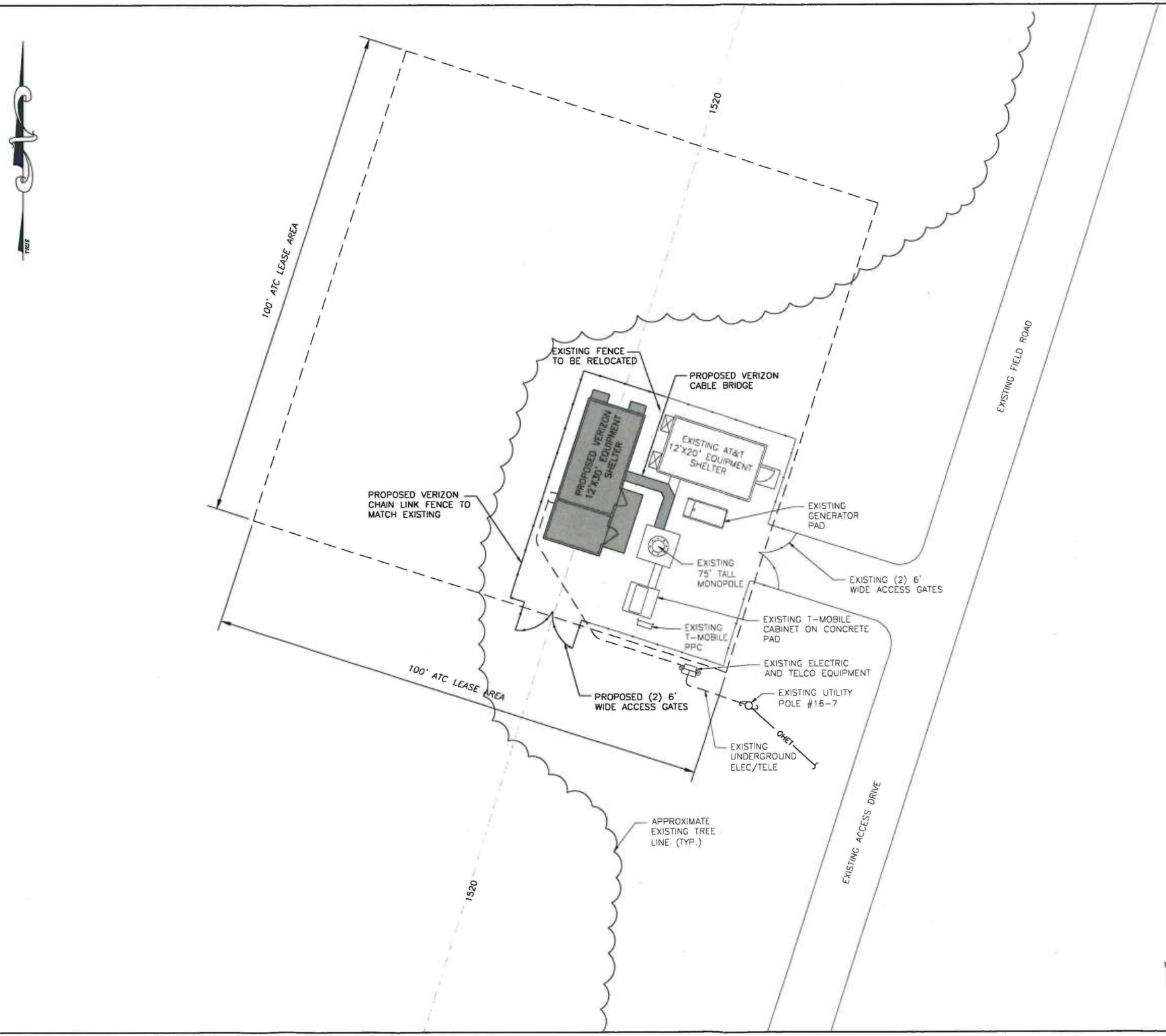

GRAPHIC SCALE

10 0 5 10 20 40

(IN FEET)
1 inch = 10 ft. AT 24X36
HALF SIZE AT 11X17

DuBois & King inc.
ENGINEERING • PLANNING • MANAGEMENT • DEVELOPMENT
6 GREEN TREE DRIVE
SO. BURLINGTON, VT 05403
TEL. (802) 878-7661
FAX. (866) 783-7101
www.dubois-king.com
RANDOLPH, VT
SPRINGFIELD, VT
BEDFORD, NH

© Copyright 2015 Dubois & King Inc.

PROFESSIONAL SEAL

NOT FOR CONSTRUCTION PRELIMINARY PLANS

NO.	DATE	DESCRIPTION	BY	CK'D

verizon wireless

PROJECT ID 20130925509
PROJECT TYPE
LOCATION CODE 271257

BROOKFIELD SOUTH

2382 RIDGE ROAD
BROOKFIELD, VT
05036

SHEET TITLE

DETAIL
SITE PLAN

PERMIT PLANS

DRAWN BY	DATE
JWP	MAY. 2015
CHECKED BY	D&K PROJECT #
LJH	422151P
PROJ ENG	D&K ARCHIVE #
LJH	8121

SHEET NUMBER

C-2

I:\422151P VZW Brookfield South\dwg\Permit Plans\C2215\SP03 Ridge Road.dwg 7/17/2015 2:55 PM

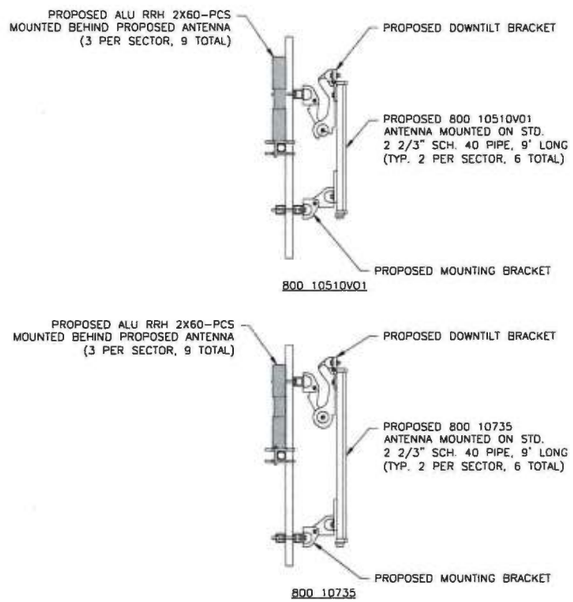

PROPOSED ANTENNA DETAILS
NOT TO SCALE

ANTENNA FACIAL SURFACE AREA

800 10510V01:
54.7" X 12.7" = 4.82 SQ. FT. x 6 ANTENNAS = 28.92 SQ. FT

800 10735:
76.1" X 11.9" = 6.29 SQ. FT. x 6 ANTENNAS = 37.74 SQ. FT

ALU RRH 2x60-PCS:
36.6" X 10.6" = 2.69 SQ. FT. x 9 RRH'S = 24.21 SQ. FT

TOTAL AREA: (28.92 + 37.74 + 24.21) = 90.87 SQ. FT

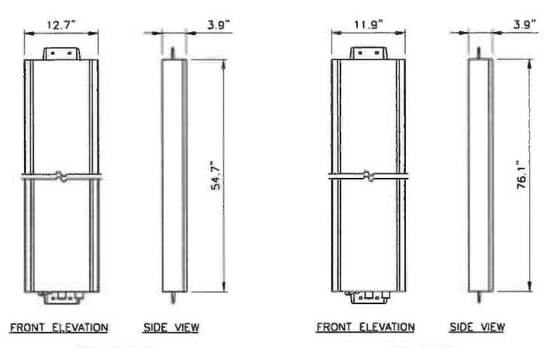

PANEL ANTENNA DETAILS
NOT TO SCALE

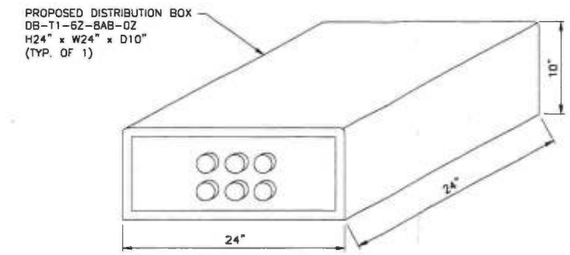

DISTRIBUTION BOX DETAIL
NOT TO SCALE

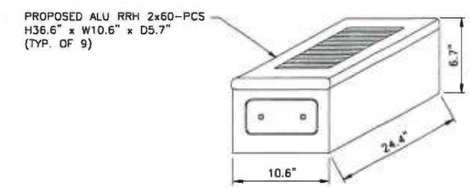

RRH DETAIL
NOT TO SCALE

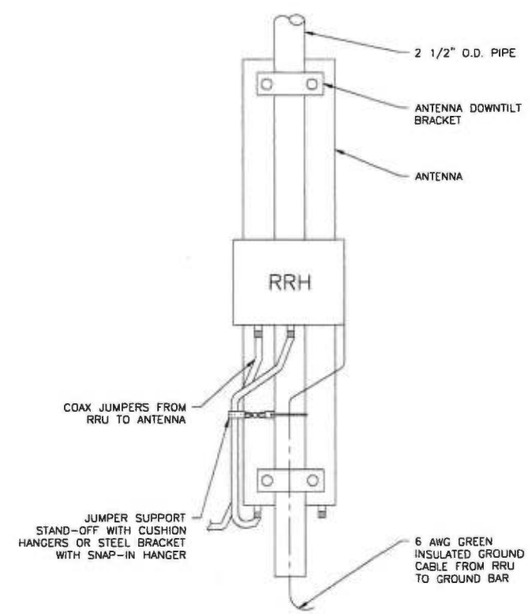

RRH PANEL DETAIL
NOT TO SCALE

DuBois & King inc.
ENGINEERING • PLANNING •
MANAGEMENT • DEVELOPMENT
6 GREEN TREE DRIVE
SO. BURLINGTON, VT 05403
TEL. (802) 878-7661
FAX. (866) 783-7101
www.dubois-king.com
RANDOLPH, VT
SPRINGFIELD, VT
BEDFORD, NH
© Copyright 2015 Dubois & King Inc.

PROFESSIONAL SEAL

NOT FOR CONSTRUCTION PRELIMINARY PLANS

NO	DATE	DESCRIPTION	BY	CK'D

verizonwireless

PROJECT ID: 20130925509
PROJECT TYPE:
LOCATION CODE: 271257

BROOKFIELD SOUTH

2382 RIDGE ROAD
BROOKFIELD, VT
05036

SHEET TITLE

ANTENNA DETAILS

PERMIT PLANS

DRAWN BY	DATE
JWP	MAY. 2015
CHECKED BY	D&K PROJECT #
LJH	422151P
PROJ ENG	D&K ARCHIVE #
LJH	

SHEET NUMBER

C-5

I:\422151P VZW Brookfield South\dwg\Permit Plans\C22151P03 Ridge Road.dwg 7/17/2015 2:57 PM

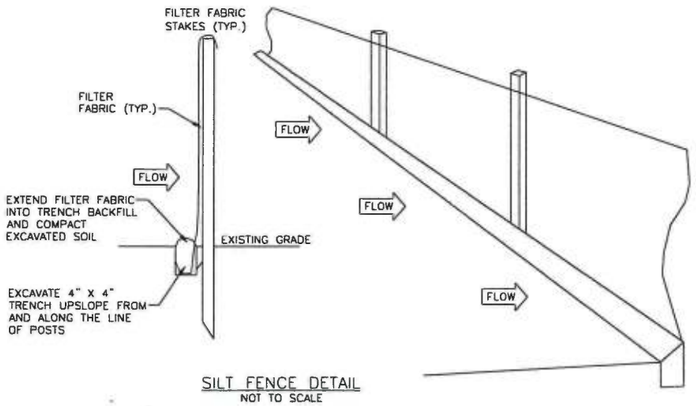

SILT FENCE DETAIL
NOT TO SCALE

NOTES:
1. SEED AND MULCH ALL EXPOSED SOILS AS SOON AS FEASIBLE.
2. CONTRACTOR TO FOLLOW STATE OF VERMONT LOW RISK HANDBOOK FOR EROSION PREVENTION AND SEDIMENT CONTROL.

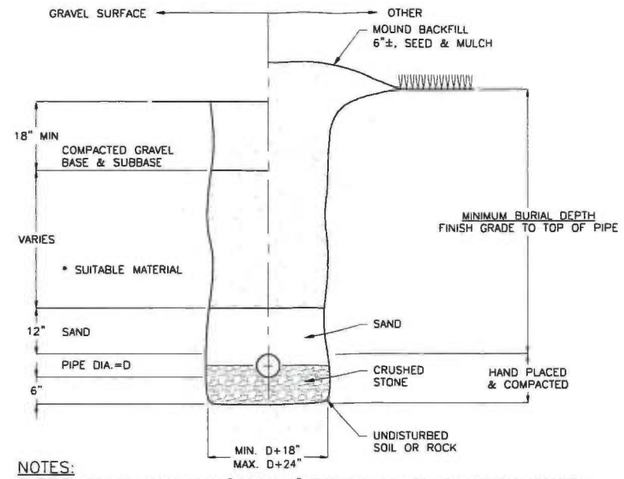

NOTES:
1. WHERE BACKFILL IS DESIGNATED "COMPACTED", THIS MEANS 90% TO 95% STANDARD PROCTOR, AASHTO T-99. ALL FILL PLACED BELOW PIPES MUST MEET THIS REQUIREMENT.
2. SUITABLE MATERIAL SHALL CONTAIN NO STONES GREATER THAN 4" IN DIAMETER, NO FROZEN LUMPS, AND ONLY MINOR AMOUNTS OF CLAY OR ORGANIC MATERIAL. ALL MATERIAL TO BE PLACED IN MAXIMUM OF 12" LIFTS AND COMPACTED BEFORE PLACING NEXT LIFT.
3. SEE ELECTRICAL PLANS FOR QUANTITY OF CONDUITS.

TYPICAL TRENCH DETAIL
NOT TO SCALE

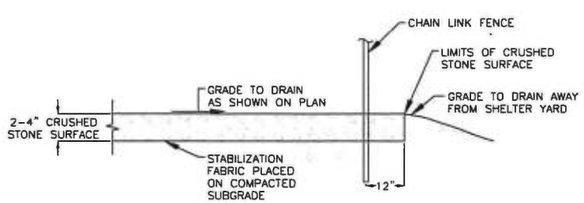

SECTION THROUGH SHELTER YARD
NOT TO SCALE

NOTE:
REMOVE TOPSOIL FOR THE PLACEMENT OF YARD STONE AND STOCKPILE ON SITE. BLEND TOPSOIL INTO NEW GRADE IMMEDIATELY SURROUNDING THE FENCED-IN AREA, AND INSURE THAT IT REMAINS WITHIN THE TOP LAYER OF SOIL STRATA.

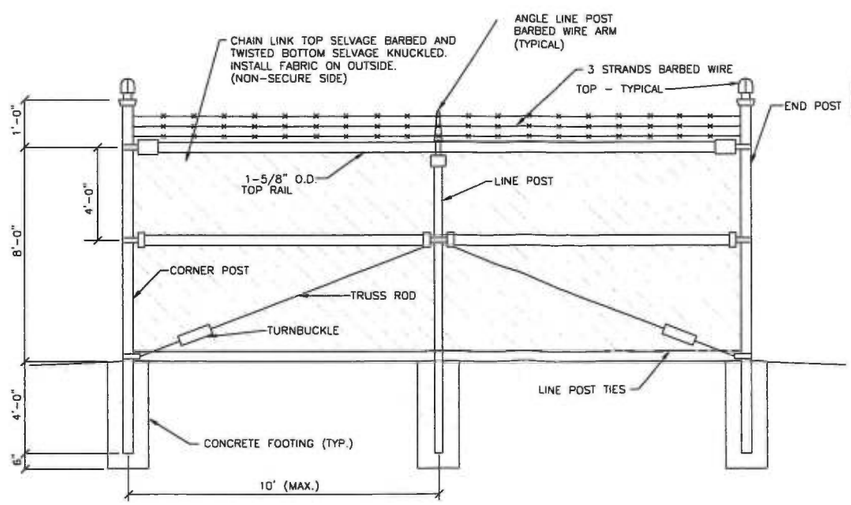

PROPOSED CHAIN LINK FENCE DETAIL
NOT TO SCALE

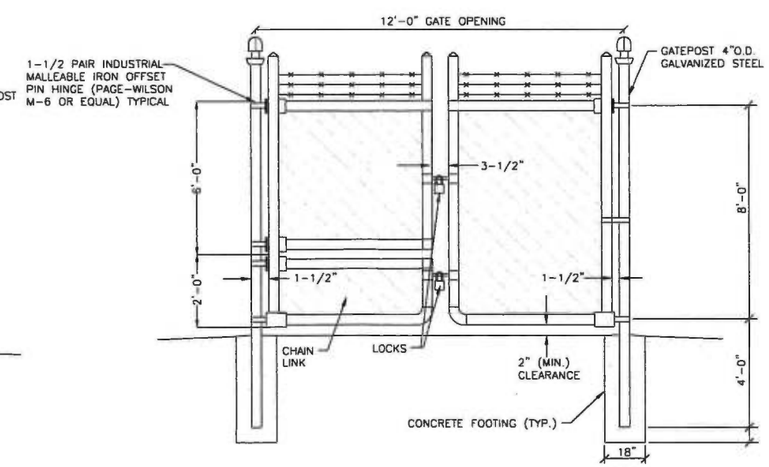

PROPOSED DOUBLE SWING GATE DETAIL
NOT TO SCALE

DuBois & King inc.
ENGINEERING • PLANNING • MANAGEMENT • DEVELOPMENT
6 GREEN TREE DRIVE
SO. BURLINGTON, VT 05403
TEL. (802) 878-7661
FAX. (866) 783-7101
www.dubois-king.com
RANDOLPH, VT
SPRINGFIELD, VT
BEDFORD, NH
© Copyright 2015 Dubois & King Inc.

PROFESSIONAL SEAL

NOT FOR CONSTRUCTION PRELIMINARY PLANS

NO.	DATE	DESCRIPTION	BY	CK'D

verizon wireless

PROJECT ID 20130925599
PROJECT TYPE
LOCATION CODE 271257

BROOKFIELD SOUTH

2382 RIDGE ROAD
BROOKFIELD, VT
05036

SHEET TITLE

CIVIL DETAILS

PERMIT PLANS

DRAWN BY	DATE
JWP	MAY. 2015
CHECKED BY	O&K PROJECT #
LJH	422151P
PROJ ENG	O&K ARCHIVE #
LJH	

SHEET NUMBER

C-6

I:\422151P VZW Brookfield South\dwg\Permit Plans\G22151SP03 Ridge Road.dwg 7/17/2015 2:57 PM

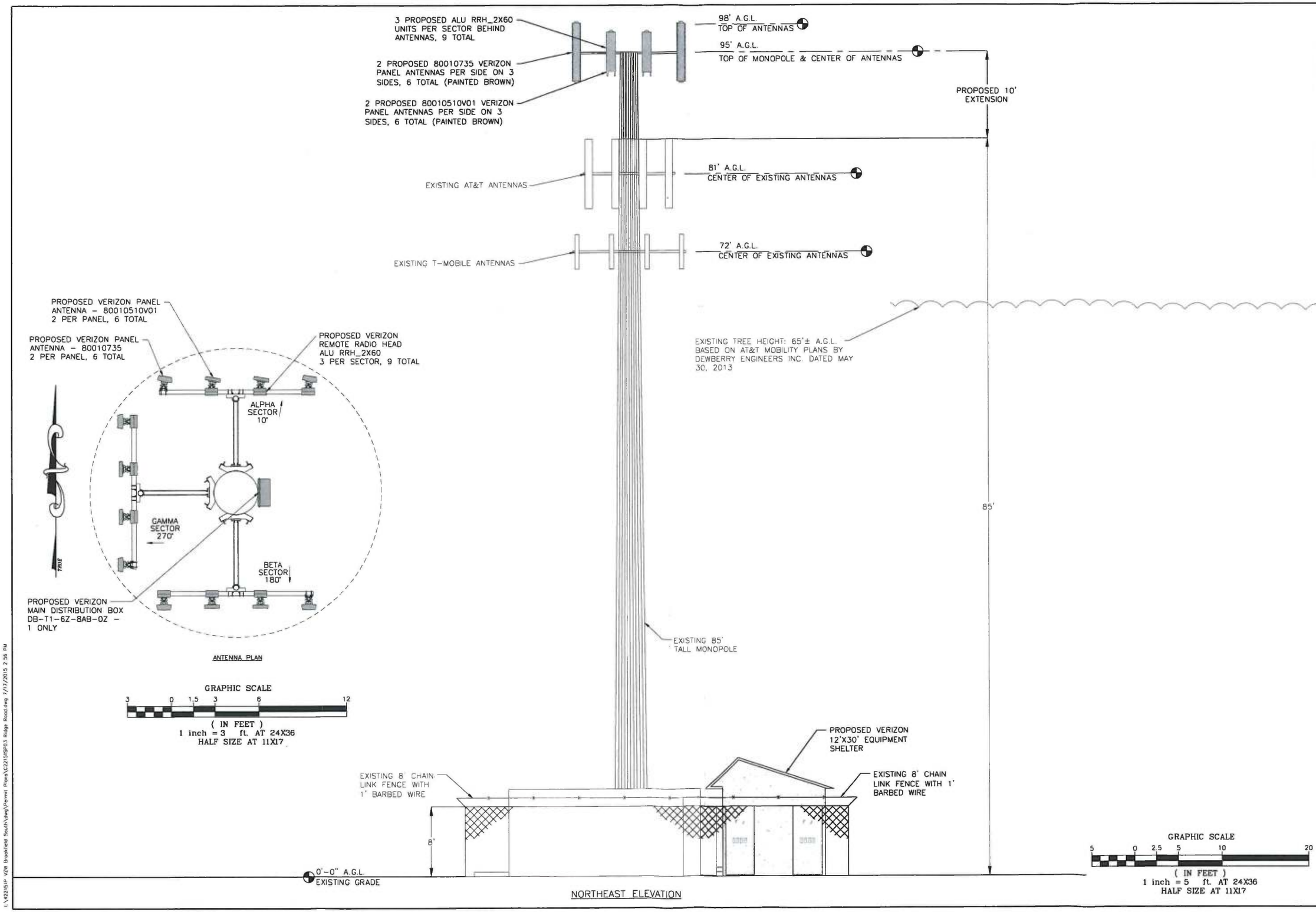

DuBois & King inc.
ENGINEERING • PLANNING • MANAGEMENT • DEVELOPMENT
6 GREEN TREE DRIVE
SO. BURLINGTON, VT 05403
TEL. (802) 878-7661
FAX. (888) 783-7101
www.dubois-king.com
RANDOLPH, VT
SPRINGFIELD, VT
BEDFORD, NH

© Copyright 2015 Dubois & King Inc.

PROFESSIONAL SEAL

NOT FOR CONSTRUCTION PRELIMINARY PLANS

NO	DATE	DESCRIPTION	BY	CK'D

verizon wireless

PROJECT ID 20130925599
PROJECT TYPE
LOCATION CODE 271257

BROOKFIELD SOUTH

2382 RIDGE ROAD
BROOKFIELD, VT
05036

SHEET TITLE

NORTHEAST TOWER ELEVATION

PERMIT PLANS

DRAWN BY	DATE
JWP	MAY. 2015
CHECKED BY	D&K PROJECT #
LJH	422151P
PROJ ENG	D&K ARCHIVE #
LJH	

SHEET NUMBER

C-4

I:\422151P VZW Brookfield South\dwg\Permit Plans\C22151SP03 Ridge Road.dwg 7/17/2015 2:56 PM

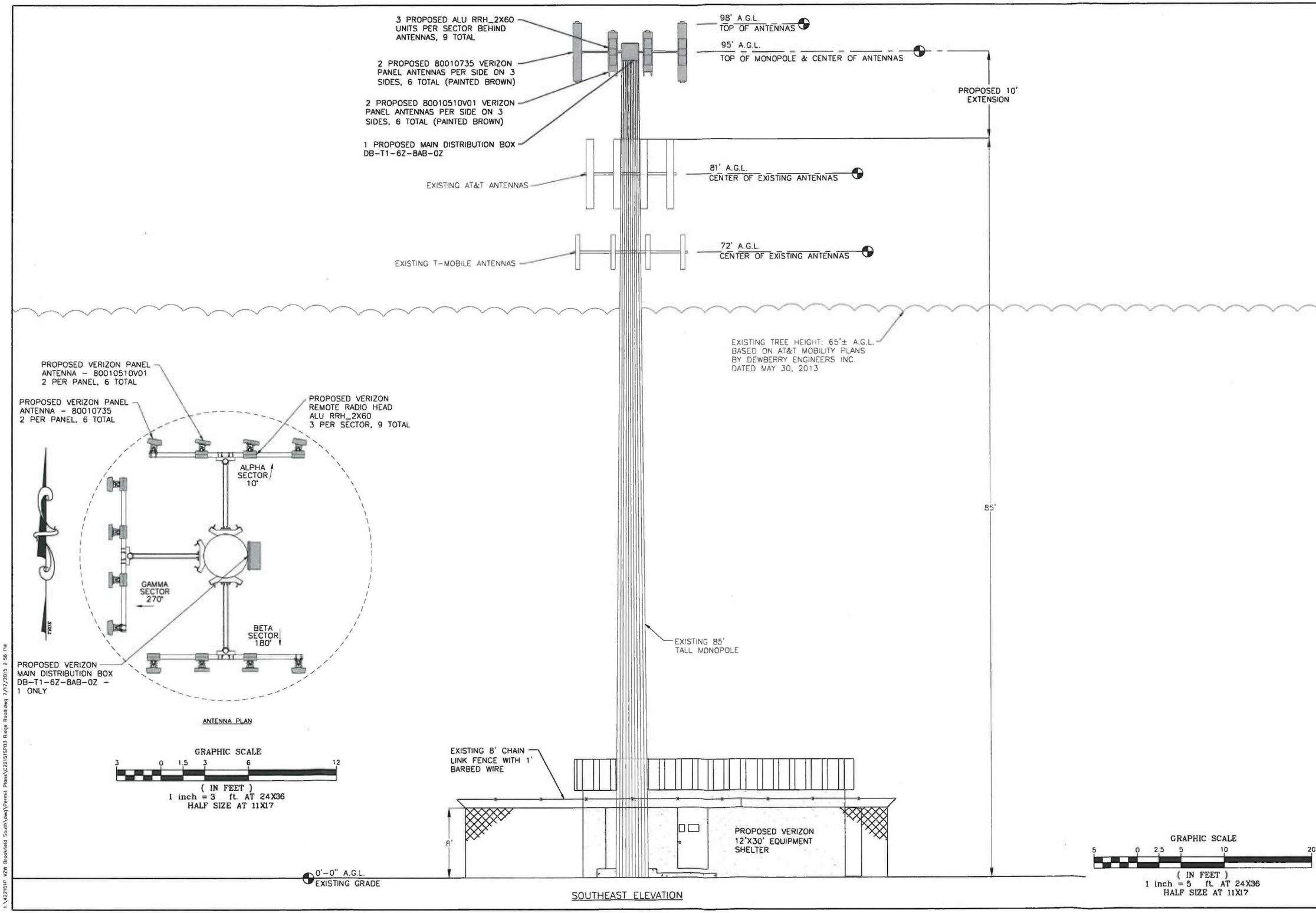

DuBois & King inc.
ENGINEERING • PLANNING • MANAGEMENT • DEVELOPMENT
6 GREEN TREE DRIVE
SO. BURLINGTON, VT 05403
TEL: (802) 878-7661
FAX: (866) 783-7101
www.dubois-king.com
RANDOLPH, VT
SPRINGFIELD, VT
BEDFORD, NH

© Copyright 2015 Dubois & King Inc.

PROFESSIONAL SEAL

NOT FOR CONSTRUCTION PRELIMINARY PLANS

NO.	DATE	DESCRIPTION	BY	CK'D

verizon wireless

PROJECT ID: 20130925599
PROJECT TYPE
LOCATION CODE: 271257

BROOKFIELD SOUTH

2382 RIDGE ROAD
BROOKFIELD, VT
05036

SHEET TITLE

SOUTHEAST TOWER ELEVATION

PERMIT PLANS

DRAWN BY	DATE
JWP	MAY. 2015
CHECKED BY	D&K PROJECT #
LJH	422151P
PROJ. ENG.	D&K ARCHIVE #
LJH	8122

SHEET NUMBER

C-3

I:\422151P VZW Brookfield South\dwg\Permit Plans\C2215\SP03 Ridge Road.dwg 7/17/2015 2:56 PM