KATHREIN
SCALA DIVISION

800 10510V01

65° Panel Antenna
Enhanced Sidelobe Suppression
Extended Downtilt Range 0°–15°

Kathrein panels for AWS feature:

- Heavy-duty construction using the highest quality materials: UV resistant pulltruded fiberglass radomes, stainless steel fasteners and hardware, rigid aluminum reflectors, and low loss coaxial cable power divider harness, all contributing to long, trouble free service life.
- Superior electrical specifications including low VSWR, wide bandwidth, flat frequency response, and superb intermodulation performance.
- Precision continuously adjustable electrical downtilt controls, manual control as standard equipment, with remote control available as an option.

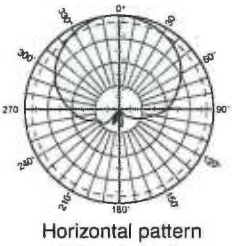

Horizontal pattern
±45°- polarization

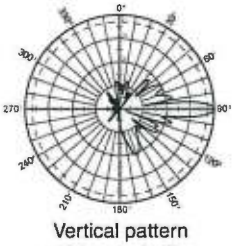

Vertical pattern
±45°- polarization
0°–15° electrical downtilt

General specifications:

Frequency range	1710–2200 MHz
VSWR	<1.5:1
Impedance	50 ohms
Intermodulation (2x20w)	IM3: <-153 dBc
Polarization	+45° and -45°
Connector	4 x 7-16 DIN female
Isolation	>30 dB
Maximum input power	300 watts (at 50°C) per input
Weight	37.5 lb (17 kg) 41.9 lb (19 kg) clamps included
Dimensions	54.7 x 12.7 x 2.8 inches (1389 x 323 x 71 mm)
Wind load Front/Side/Rear Mounting category	at 93 mph (150kph) 158 lbf / 36 lbf / 162 lbf (700 N) / (160 N) / (720 N) M (Medium)
Wind survival rating*	120 mph (200 kph)
Shipping dimensions	66.4 x 13.3 x 4.4 inches (1686 x 337 x 112 mm)
Shipping weight	46.3 lb (21 kg)
Mounting	Fixed mounts for 2 to 4.6 inch (50 to 115 mm). OD masts are included and tilt options are available.

See reverse for order information.

Specifications:	**1710–1880 MHz**	**1850–1990 MHz**	**1920–2170 MHz**	**2000–2200 MHz**
Gain	17.5 dBi	17.6 dBi	17.7 dBi	17.8 dBi
Front-to-back ratio (180° ±30°)	≥30 dB (co-polar)	≥30 dB (co-polar)	≥30 dB (co-polar)	≥28 dB (co-polar)
Horizontal beamwidth	65° (half-power)	63° (half-power)	62° (half-power)	62° (half-power)
Vertical beamwidth	7.9° (half-power)	7.5° (half-power)	7.2° (half-power)	6.9° (half-power)
Electrical downtilt continuously adjustable	0°–15° (manual or optional remote control)	0°–15°	0°–15°	0°–15°
Sidelobe suppression first sidelobe above main beam within 0°–20° sector above horizon	0° 5° 10° 15° T ≥17 20 18 17 dB ≥17 18 18 16 dB	0° 5° 10° 15° T ≥16 20 18 18 dB ≥16 17 17 16 dB	0° 5° 10° 15° T ≥15 19 18 17 dB ≥15 17 17 16 dB	0° 5° 10° 15° T ≥14 18 18 16 dB ≥14 16 16 15 dB
Cross polar ratio Main direction 0° Sector ±60°	24 dB (typical) ≥9 dB	24 dB (typical) ≥9 dB	24 dB (typical) ≥10 dB	26 dB (typical) ≥10 dB
Null-fill at 0° tilt	23 dB	22 dB	21 dB	20 dB

*Mechanical design is based on environmental conditions as stipulated in TIA-222-G-2 (December 2009) and/or ETS 300 019-1-4 which include the static mechanical load imposed on an antenna by wind at maximum velocity. See the Engineering Section of the catalog for further details.

RoHS Lead-Free

11307-A
936.3986/a

Kathrein Inc., Scala Division Post Office Box 4580 Medford, OR 97501 (USA) Phone: (541) 779-6500 Fax: (541) 779-3991
Email: communications@kathrein.com Internet: www.kathrein-scala.com

KATHREIN
SCALA DIVISION

800 10510V01

65° Panel Antenna
Enhanced Sidelobe Suppression
Extended Downtilt Range 0°–15°

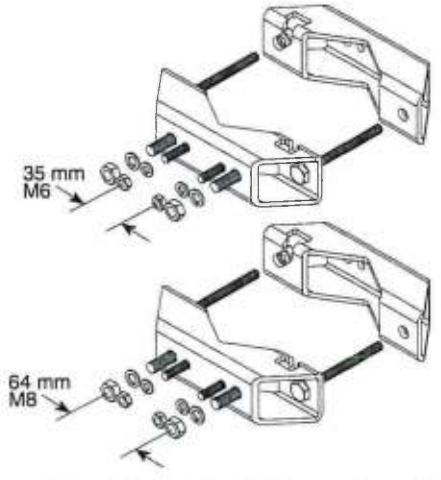

2 x 738 546 Mounting Kit (included)

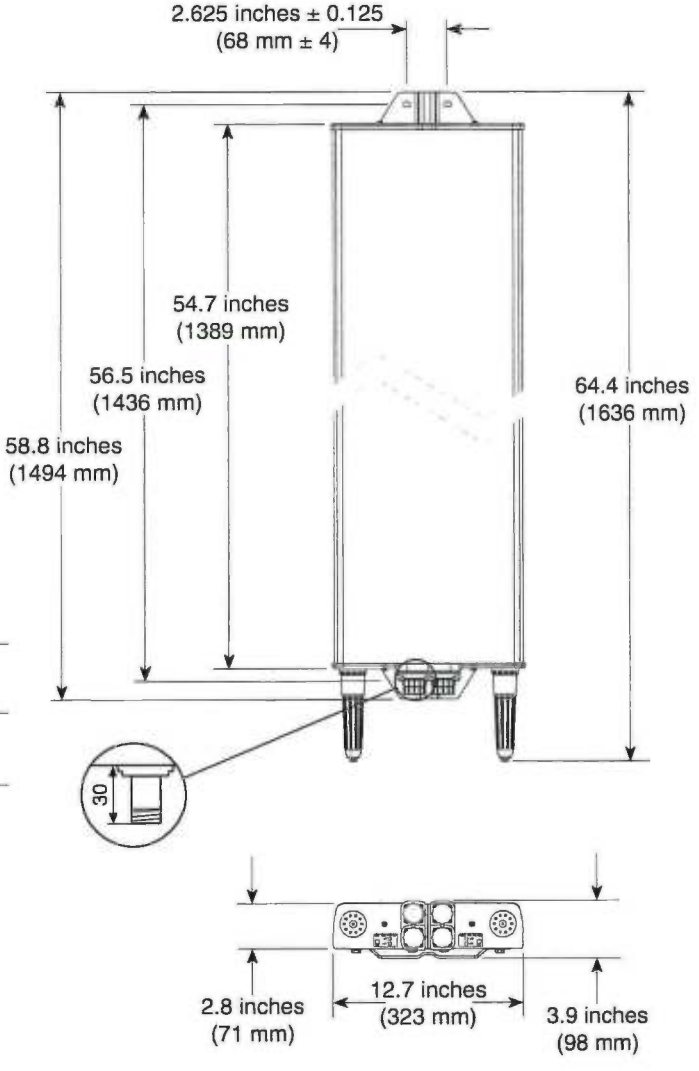

Mounting Options:

Model	Description
2 x 738 546 (included)	Mounting Kit for 2 to 4.6 inch (50 to 115 mm) OD mast. 4.4 lb (2 kg)
850 10013	Tilt Mount Kit 0–15 degrees downtilt angle. 7.4 lb (3.7 kg)

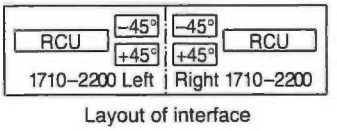

Layout of interface

Order Information:

Model	Description
800 10510V01	Antenna with 7-16 DIN connectors 0°–15° adjustable electrical downtilt

All specifications are subject to change without notice. The latest specifications are available at www.kathrein-scala.com.

Kathrein Inc., Scala Division Post Office Box 4580 Medford, OR 97501 (USA) Phone: (541) 779-6500 Fax: (541) 779-3991
Email: communications@kathrein.com Internet: www.kathrein-scala.com

KATHREIN
SCALA DIVISION

800 10735V01

65° Single Band Panel Antenna, 6'

	Antenna
Single Band (MHz)	**698–894**
Dual Polarization	**X**
HPBW	**65°**
Adj. Electrical Downtilt Manual or optional remote control	**0°–10°**

General specifications:

Frequency range	698–894 MHz
VSWR	<1.5:1
Impedance	50 ohms
Intermodulation (2x20w)	IM3: <-150 dBc
Polarization	+45° and -45°
Maximum input power	500 watts per input (at 50°C)
Connector	2 x 7-16 DIN female (long neck) (bottom mounted)
Isolation	>30 dB
Electrical downtilt	0–10 degrees (continuously adjustable)
See reverse for order information.	

698–894 MHz

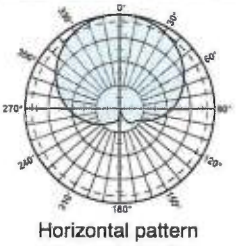

Horizontal pattern
±45°- polarization

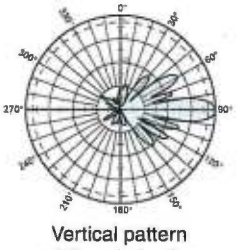

Vertical pattern
±45°- polarization
0°–10° electrical downtilt

Specifications:	698–806 MHz	824–894 MHz
Gain	15.5 dBi	16 dBi
Front-to-back ratio	>30 dB (co-polar) 35 dB (average)	>30 dB (co-polar) 35 dB (average)
+45° and -45° polarization horizontal beamwidth	67° (half-power)	65° (half-power)
+45° and -45° polarization vertical beamwidth	11.3° (half-power)	10° (half-power)
Min. sidelobe suppression for first sidelobe above main beam average	0° 5° 10° T 16 17 17 dB 16 19 20 dB	0° 5° 10° T 18 17 16 dB 20 20 20 dB
Cross polar ratio Main direction 0° Sector ±60°	 25 dB (typical) >11 dB, Average: 15 dB	 25 dB (typical) >11 dB, Average: 15 dB

IRT specifications:

Logical interface ex factory[1]	3GPP/AISG 2.0
Protocols	AISG 1.1 and 3GPP/AISG 2.0 compliant
Hardware interface[2]	2 x 8 pin connector acc. IEC 60130-9; according to AISG: – IRT in (male): Control / Daisy chain in – IRT in (female): Daisy chain out
Power supply	10–30 V
Power consumption	<1 watt (standby) <8.5 watts (motor activated)
Adjustment time (full range)	40 sec.
Adjustment cycles	>50,000
Certification	FCC 15.107 Class B Computing Devices

[1] The protocol of the logical interface can be switched from 3GPP/AISG 2.0 to AISG 1.1 and vice versa with a vendor specific command. Start-up operation of the RCU 86010149 is possible in an RET system supporting AISG 1.1 or supporting 3GPP/AISG 2.0 after performing a layer 2 reset before address assignment. The protocol can also be changed as follows: AISG 1.1 to 3GPP: Enter "3GPP" into the additional data filed "Installer's ID" and perform a layer 7 reset or a power reset. 3GPP to AISG 1.1: Enter "AISG 1" into the additional datafield "Installer's ID" and perform a layer 2 reset or a power reset. After switching the protocol any other information can be entered into the "Installer's ID" field.

[2] The tightning torque for fixing the connector must be 0.5 – 1.0 Nm ('hand-tightened'). The connector should be tightened by hand only!

TÜV
11387-D
936.4273/a

RoHS
Pb
Lead-Free
Oct 19, 2012

AISG
Antenna Interface Standards Group

Kathrein Inc., Scala Division Post Office Box 4580 Medford, OR 97501 (USA) Phone: (541) 779-6500 Fax: (541) 779-3991
Email: communications@kathrein.com Internet: www.kathrein-scala.com

KATHREIN
SCALA DIVISION

800 10735V01

65° Single Band Panel Antenna, 6'

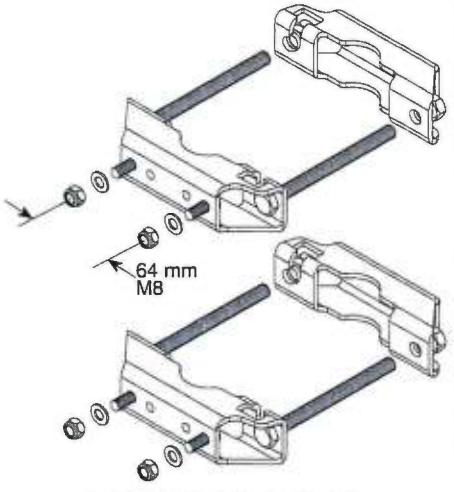

Mounting Brackets

for use with 2-point mount antennas
Mast dia. 2–4.5 inches (50–115 mm)
Weight: 4.4 lb (2 kg)

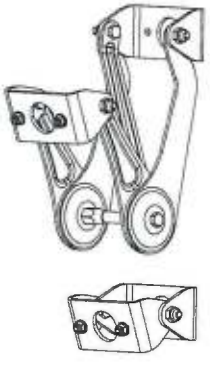

Mechanical Tilt Brackets

for use with 2-point mount antennas
Weight: 9.5 lb (4.3 kg)
(Model 850 10008)

Mechanical specifications:

Weight	30.9 lb (14 kg)	35.3 lb (16 kg) clamps included
Dimensions H x W x D	76.1 x 11.9 x 3.9 inches (1934 x 303 x 99 mm)	
Wind load Front/Side/Rear Mounting category	at 93 mph (150kph) 203 lbf / 70 lbf / 232 lbf (900 N / 310 N / 1030 N) H (Heavy)	
Wind survival rating*	150 mph (240 kph)	
Shipping dimensions	81.1 x 12.4 x 4.5 inches (2060 x 315 x 115 mm)	
Shipping weight	39.7 lb (18 kg)	
Mounting bracket	2-point hot-dip galvanized with stainless steel hardware for 2 to 4.5 inch (50 to 115 mm) OD masts.	

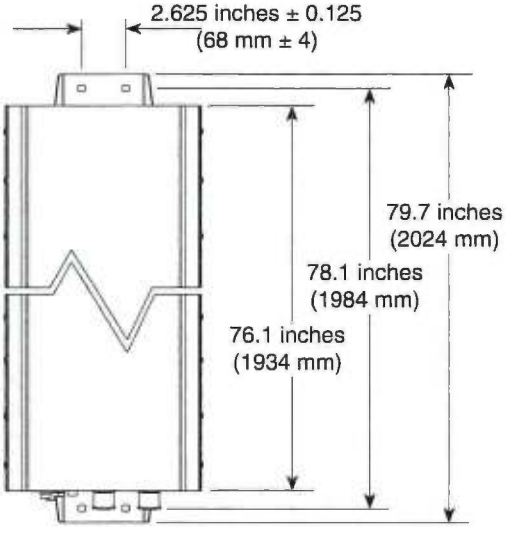

KATHREIN 860 10149

FC Tested To Comply With FCC Standards

This device complies with part 15 of the FCC Rules. Operation is subject to the following two conditions: (1) This device may not cause harmful interference, and (2) this device must accept any interference received, including interference that may cause undesired operation.

Note: Refer to part number 860 10149 for the specifications of the remote control actuator.

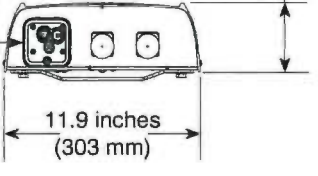

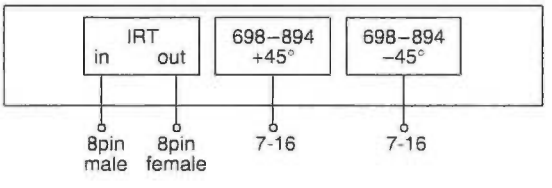

Order Information:

Model	Description
800 10735V01	Antenna with mounting bracket 0°–10° electrical downtilt
800 10735V01K	Antenna with mounting bracket and mechanical tilt bracket 0°–10° electrical downtilt

*Mechanical design is based on environmental conditions as stipulated in TIA-222-G-2 (December 2009) and/or ETS 300 019-1-4 which include the static mechanical load imposed on an antenna by wind at maximum velocity. See the Engineering Section of the catalog for further details.

All specifications are subject to change without notice. The latest specifications are available at www.kathrein-scala.com.

Kathrein Inc., Scala Division Post Office Box 4580 Medford, OR 97501 (USA) Phone: (541) 779-6500 Fax: (541) 779-3991
Email: communications@kathrein.com Internet: www.kathrein-scala.com

RRH 2X60-AWS = 36.6" long and 10.6" wide

RRH 2X60-PCS = 22" long and 12" wide

ALCATEL-LUCENT WIRELESS PRODUCT DATASHEET

RRH2X60-AWS FOR BAND 4 APPLICATIONS

The Alcatel-Lucent RRH2x60-AWS is a high power, small form factor Remote Radio Head operating in the AWS frequency band (3GPP Band 4) for LTE technology. It is designed with an eco-efficient approach, providing operators with the means to achieve high quality and high capacity coverage with minimum site requirements and efficient operation.

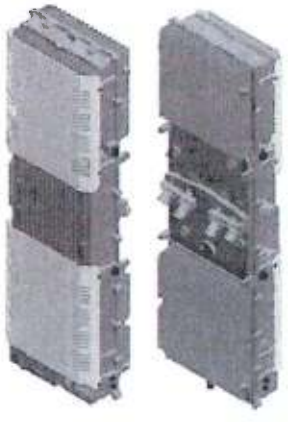

A distributed Node B expands the deployment options by using two components, a Base Band Unit (BBU) containing the digital assets and a separate RRH containing the radio-frequency (RF) elements. This modular design optimizes available space and allows the main components of a Node B to be installed separately, within the same site or several kilometers apart.

The Alcatel-Lucent RRH2x60-AWS is linked to the BBU by an optical-fiber connection carrying downlink and uplink digital radio signals along with operations, administration and maintenance (OA&M) information.

SUPERIOR RF PERFORMANCE

The Alcatel-Lucent RRH2x60-AWS integrates all the latest technologies. This allows to offer best-in-class characteristics.

It delivers an outstanding 120 watts of total RF power thanks to its two transmit RF paths of 60 W each.

It is ideally suited to support multiple-input multiple-output (MIMO) 2x2 operation.

It includes four RF receivers to natively support 4-way uplink reception diversity. This improves the radio uplink coverage and this can be used to extend the cell radius commensurate with 2x2MIMO 2x60 W for the downlink.

It supports multiple discontinuous LTE carriers within an instantaneous bandwidth of 45 MHz corresponding to the entire AWS B4 spectrum.

The latest generation power amplifiers (PA) used in this product achieve high efficiency (>40%), resulting in improved power consumption figures.

OPTIMIZED TCO

The Alcatel-Lucent RRH2x60-AWS is designed to make available all the benefits of a distributed Node B, with excellent RF characteristics, with low capital expenditures (CAPEX) and low operating expenditures (OPEX).

The Alcatel-Lucent RRH2x60-AWS is a very cost-effective solution to deploy LTE MIMO.

EASY INSTALLATION

The RRH2x60-AWS includes a reversible mounting bracket which allows for ease of installation behind an antenna, or on a rooftop knee wall while providing easy access to the mid body RF connectors.

The limited space available in some sites may prevent the installation of traditional single-cabinet BTS equipment. However, many of these sites can host an Alcatel-Lucent RRH2x60-AWS installation, providing more flexible site selection and improved network quality along with greatly reduced installation time and costs.

The Alcatel-Lucent RRH2x60-AWS is a zero-footprint solution and is convection cooled without fans for silent operation, simplifying negotiations with site property owners and minimizing environmental impacts.

Installation can easily be done by a single person as the Alcatel–Lucent RRH2x60-AWS is compact and weighs about 25 kg, eliminating the need for a crane to hoist the BTS cabinet to the rooftop. A site can be in operation in less than one day.

Macro

RRH for space-constrained cell sites

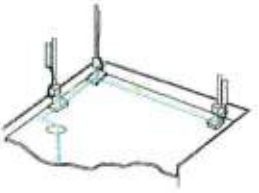

Distributed

FEATURES

- RRH2x60-AWS integrates two power amplifiers of 60W rating (at each antenna connector)
- Support multiple carriers over the entire 3GPP band 4
- RRH2x60-AWS is optimized for LTE operation
- RRH2x60-AWS is a very compact and lightweight product
- Advanced power management techniques are embedded to provide power savings, such as PA bias control

BENEFITS

- MIMO LTE operation with only one single unit per sector
- Improved uplink coverage with built-in 4-way receive diversity capability
- RRH can be mounted close to the antenna, eliminating nearly all losses in RF cables and thus reducing power consumption by 50% compared to conventional solutions
- Distributed configurations provide easily deployable and cost-effective solutions, near zero footprint and silent solutions, with minimum impact on the neighborhood, which ease the deployment
- RETA and TMA support without additional hardware thanks to the AISG v2.0 port and the integrated Bias-Tees. Bias-Tees support AISG DC supply and signaling.

TECHNICAL SPECIFICATIONS

Specifications listed are hardware capabilities. Some capabilities depend on support in a specific software release or future release.

36.6" x 10.6" x 5.75"

Dimensions and weights

- HxWxD : 930x270x146 mm (with solar shield)
- Weight : 25 kg (55 lbs) (with solar shield)

Electrical Data

- Power Supply : -48V DC (-40.5 to -57V)
- Power Consumption (ETSI average traffic load reference) : 250W @2x60W

RF Characteristics

- Frequency band: 1710-1755, UL / 2110-2155 MHz, DL (3GPP band 4)
- Output power: 2x60W at antenna connectors
- Technology supported: LTE
- Instantaneous bandwidth: 45 MHz
- Rx diversity: 2-way and 4-way uplink reception
- Typical sensitivity without Rx diversity: -105 dBm for LTE

Connectivity

- Two CPRI (3-6) optical ports for daisychaining and up to six RRHs per fiber
- Type of optical fiber: Single-Mode (SM) and Multi-Mode (MM) SFPs
- Optical fiber length: up to 300m using MM fiber, up to 15km using SM fiber
- TMA/RETA : AISG 2.0 (RS485 connector and internal Bias-Tee)
- Four external alarms
- Surge protection for all external ports (DC and RF)

Environmental specifications

- Operating temperature: -40°C to 55°C including solar load
- Operating relative humidity: 8% to 100%
- Environmental Conditions : ETS 300 019-1-4 class 4.1E
- Ingress Protection : IEC 60529 IP65
- Acoustic Noise : Noiseless (natural convection cooling)

Safety and Regulatory Data

- EMC : 3GPP 25113, EN 301 489-1, EN 301 489-23, GR 1089, GR 3108, OET-65
- Safety : IEC60950-1, EN 60825-1, UL, ANSI/NFPA 70, CAN/CSA-C22.2
- Regulatory : FCC Part 15 Class B, CE Mark – European Directive : 2002/95/EC (ROHS); 2002/96/EC (WEEE); 1999/5/EC (R&TTE)
- Health : EN 50385

www.alcatel-lucent.com Alcatel, Lucent, Alcatel-Lucent and the Alcatel-Lucent logo are trademarks of Alcatel-Lucent. All other trademarks are the property of their respective owners. The information presented is subject to change without notice.
Alcatel-Lucent assumes no responsibility for inaccuracies contained herein.

Copyright © 2014 Alcatel-Lucent. All rights reserved.

Alcatel·Lucent

AT THE SPEED OF IDEAS™