AMERICAN TOWER®
CORPORATION

Structural Analysis Report

Structure	:	**85 ft Monopole with 10 ft Proposed Extension**
ATC Site Name	:	**Brookfield VT, VT**
ATC Site Number	:	**274392**
Engineering Number	:	**56107824**
Proposed Carrier	:	**Verizon Wireless**
Carrier Site Name	:	**Brookfield South, VT**
Carrier Site Number	:	**271257**
Site Location	:	**2382 Ridge Road** **Brookfield, VT 05036-9758** **44.010747,-72.616214**
County	:	**Orange**
Date	:	**June 3, 2015**
Max Usage	:	**105%**
Result	:	**Pass - Pending Modifications**

Reviewed by:
Neil Kuplic, PE
Director of Structural Engineering

STATE OF VERMONT
NEIL J. KUPLIC
NO. 8876
STRUCTURAL I
LICENSED
PROFESSIONAL ENGINEER

Prepared By:
Robert D. Barrett, E.I.
Structural Engineer I

Robert D. Barrett

Jun 3 2015 4:47 PM

AMERICAN TOWER®
CORPORATION

Eng. Number 56107824
June 3, 2015

Table of Contents

Introduction 1

Supporting Documents 1

Analysis 1

Conclusion 1

Existing and Reserved Equipment 2

Equipment to be Removed 2

Proposed Equipment 2

Structure Usages 3

Foundations 3

Deflection, Twist, and Sway 3

Standard Conditions 4

Calculations ..... Attached

Introduction

The purpose of this report is to summarize results of a structural analysis performed on the 85 ft monopole with 10 ft proposed extension to reflect the change in loading by Verizon Wireless.

Supporting Documents

Tower Drawings	Nello Drawing #128650, dated April 16, 2010
Foundation Drawing	ATC Job #45022472, dated April 21, 2010
Geotechnical Report	Terracon Project #J1095160, dated October 2, 2009
Modifications	ATC Job #46654333, dated April 7, 2011

Analysis

The tower was analyzed using American Tower Corporation's tower analysis software. This program considers an elastic three-dimensional model and second-order effects per ANSI/TIA-222.

Basic Wind Speed:	90 mph (3-Second Gust, V_{asd}) / 115 mph (3-Second Gust, V_{ult})
Basic Wind Speed w/ Ice:	40 mph (3-Second Gust) w/ 3/4" radial ice concurrent
Code:	ANSI/TIA-222-G / 2012 IBC / 2012 Vermont Fire & Building Safety Code
Structure Class:	II
Exposure Category:	B
Topographic Category:	1
Crest Height:	0 ft
Spectral Response:	Ss = 0.25, S_1 = 0.09
Site Class:	D - Stiff Soil

Conclusion

Based on the analysis results, the structure meets the requirements per the applicable codes listed above. The tower and foundation can support the equipment as described in this report once the pending modifications have been installed. Failure to install the modifications listed will void the results of this analysis.

If you have any questions or require additional information, please contact American Tower via email at Engineering@americantower.com. Please include the American Tower site name, site number, and engineering number in the subject line for any questions.

Existing and Reserved Equipment

Elevation[1] (ft)		Qty	Antenna	Mount Type	Lines	Carrier
Mount	RAD					
81.0	82.0	6	14" x 9" TTA	Sector Frames	(3) 3/8" Coax (6) 0.78" 8 AWG 6 (1) 1/2" Coax (1) 0.53" Hybrid	AT&T Mobility
	81.0	3	Raycap DC6-48-60-18-8F			
		15	Ericsson RRUS-11			
		12	Andrew SBNH-1D6565C			
72.0	72.0	9	TTA	Low Profile Platform	(19) 1 5/8" Coax	T-Mobile
		1	3' Grid Dish			
		9	82" x 9" Panel			

Equipment to be Removed

Elevation[1] (ft)		Qty	Antenna	Mount Type	Lines	Carrier
Mount	RAD					
No loading considered as to be removed						

Proposed Equipment

Elevation[1] (ft)		Qty	Antenna	Mount Type	Lines	Carrier
Mount	RAD					
95.0	95.0	3	Alcatel-Lucent RRH2X60-AWS	Low Profile Platform	(2) 1 5/8" Fiber	Verizon Wireless
		3	Alcatel-Lucent RRH2x60 700			
		1	RFS DB-T1-6Z-8AB-0Z			
		6	Kathrein 800 10510V01			
		6	Kathrein 800 10735			

[1]Mount elevation is defined as height above bottom of steel structure to the bottom of mount, RAD elevation is defined as center of antenna above ground level (AGL).

Install proposed coax inside the pole shaft.

Structure Usages

Structural Component	Controlling Usage	Pass/Fail
Anchor Bolts	75%	Pass
Shaft	105%	Pass
Base Plate	31%	Pass
Flanges	32%	Pass

Foundations

Reaction Component	Original Design Reactions	Factored Design Reactions*	Analysis Reactions	% of Design
Moment (Kips-Ft)	847.7	1,144.4	945.2	83%
Shear (Kips)	14.7	19.8	12.1	61%

*** The design reactions are factored by 1.35 per ANSI/TIA-222-G, Sec. 15.5.1**

The structure base reactions resulting from this analysis are acceptable when compared to those shown on the original structure drawings, therefore no modification or reinforcement of the foundation will be required.

Deflection and Sway*

Antenna Elevation (ft)	Antenna	Carrier	Deflection (ft)	Sway (Rotation) (°)
95.0	RFS DB-T1-6Z-8AB-0Z	Verizon Wireless	1.941	2.027
	Kathrein 800 10735			
	Alcatel-Lucent RRH2X60-AWS			
	Alcatel-Lucent RRH2x60 700			
	Kathrein Scala 800 10510V01			
72.0	3' Grid Dish	T-Mobile	1.143	1.871

***Deflection and Sway was evaluated considering a design wind speed of 60 mph (3-Second Gust) per ANSI/TIA-222-G**

AMERICAN TOWER®
CORPORATION

Standard Conditions

All engineering services are performed on the basis that the information used is current and correct. This information may consist of, but is not necessary limited, to:

-- Information supplied by the client regarding the structure itself, antenna, mounts and feed line loading on the structure and its components, or other relevant information.

-- Information from drawings in the possession of American Tower Corporation, or generated by field inspections or measurements of the structure.

It is the responsibility of the client to ensure that the information provided to ATC Tower Services LLC and used in the performance of our engineering services is correct and complete. In the absence of information to the contrary, we assume that all structures were constructed in accordance with the drawings and specifications and that their capacity has not significantly changed from the "as new" condition.

Unless explicitly agreed by both the client and American Tower Corporation, all services will be performed in accordance with the current revision of ANSI/TIA -222. The design basic wind speed will be determined based on the minimum basic wind speed as prescribed in ANSI/TIA-222. Although every effort is taken to ensure that the loading considered is adequate to meet the requirements of all applicable regulatory entities, we can provide no assurance to meet any other local and state codes or requirements. If wind and ice loads or other relevant parameters are to be different from the minimum values recommended by the codes, the client shall specify the exact requirement.

All services are performed, results obtained, and recommendations made in accordance with generally accepted engineering principles and practices. ATC Tower Services LLC is not responsible for the conclusions, opinions and recommendations made by others based on the information we supply.

© 2007 - 2015 by ATC IP LLC. All rights reserved.

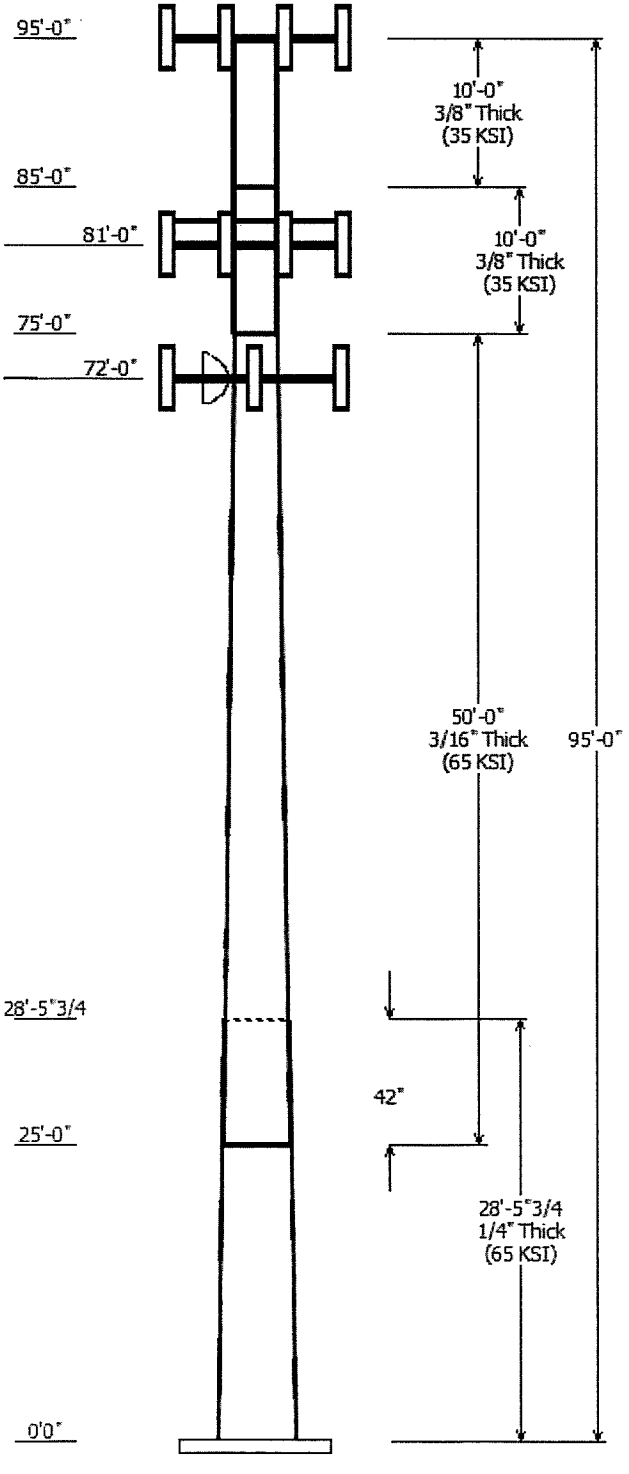

Job Information

Pole :	274392	Code:	ANSI/TIA-222-G
Description :	85 ft Nello Monopole w/ 10 ft Proposed Extension		
Client :	Verizon Wireless	Struct Class :	II
Location :	Brookfield VT, VT		
Shape :	18 Sides	Exposure :	B
Height :	95.00 (ft)	Topo :	1
Base Elev (ft):	0.00		
Taper:	0.196001(in/ft)		

Sections Properties

Shaft Section	Length (ft)	Diameter (in) Accross Flats Top	Bottom	Thick (in)	Joint Type	Overlap Length (in)	Taper (in/ft)	Steel Grade (ksi)
1	28.480	26.74	32.32	0.250		0.000	0.196000	65
2	50.000	18.00	27.80	0.188	Slip Joint	41.760	0.196000	65
3	10.000	18.00	18.00	0.375	Butt Joint	0.000	0.000000	35
4	10.000	18.00	18.00	0.375	Butt Joint	0.000	0.000000	35

Discrete Appurtenance

Attach Elev (ft)	Force Elev (ft)	Qty	Description
95.000	95.000	6	Kathrein Scala 800 10510V01
95.000	95.000	3	Alcatel-Lucent RRH2x60 700
95.000	95.000	3	Alcatel-Lucent RRH2X60-AWS
95.000	95.000	6	Kathrein 800 10735
95.000	95.000	1	RFS DB-T1-6Z-8AB-0Z
95.000	95.000	1	Flat Low Profile Platform
81.000	82.000	6	14" x 9" TTA
81.000	81.000	3	Raycap DC6-48-60-18-8F
81.000	81.000	3	Flat Light Sector Frame
81.000	81.000	15	Ericsson RRUS-11
81.000	81.000	12	Andrew SBNH-1D6565C
72.000	72.000	1	Round Low Profile Platform
72.000	72.000	1	3' Grid Dish
72.000	72.000	9	TTA
72.000	72.000	9	82" x 9" Panel

Linear Appurtenance

Elev (ft) From	To	Description	Exposed To Wind
0.000	72.000	1 5/8" Coax	No
0.000	81.000	0.53" Hybrid	No
0.000	81.000	0.78" 8 AWG 6	No
0.000	81.000	1/2" Coax	No
0.000	81.000	3/8" Coax	No
0.000	95.000	1 5/8" Fiber	No

Load Cases

1.2D + 1.6W	90 mph with No Ice
0.9D + 1.6W	90 mph with No Ice (Reduced DL)
1.2D + 1.0Di + 1.0Wi	40 mph with 0.75 in Radial Ice
(1.2 + 0.2Sds) * DL + E	Seismic Equivalent Lateral Forces Method
(1.2 + 0.2Sds) * DL + E	Seismic Equivalent Modal Analysis Method
(0.9 - 0.2Sds) * DL + E	Seismic (Reduced DL) Equivalent Lateral
(0.9 - 0.2Sds) * DL + E	Seismic (Reduced DL) Equivalent Modal
1.0D + 1.0W	Serviceability 60 mph

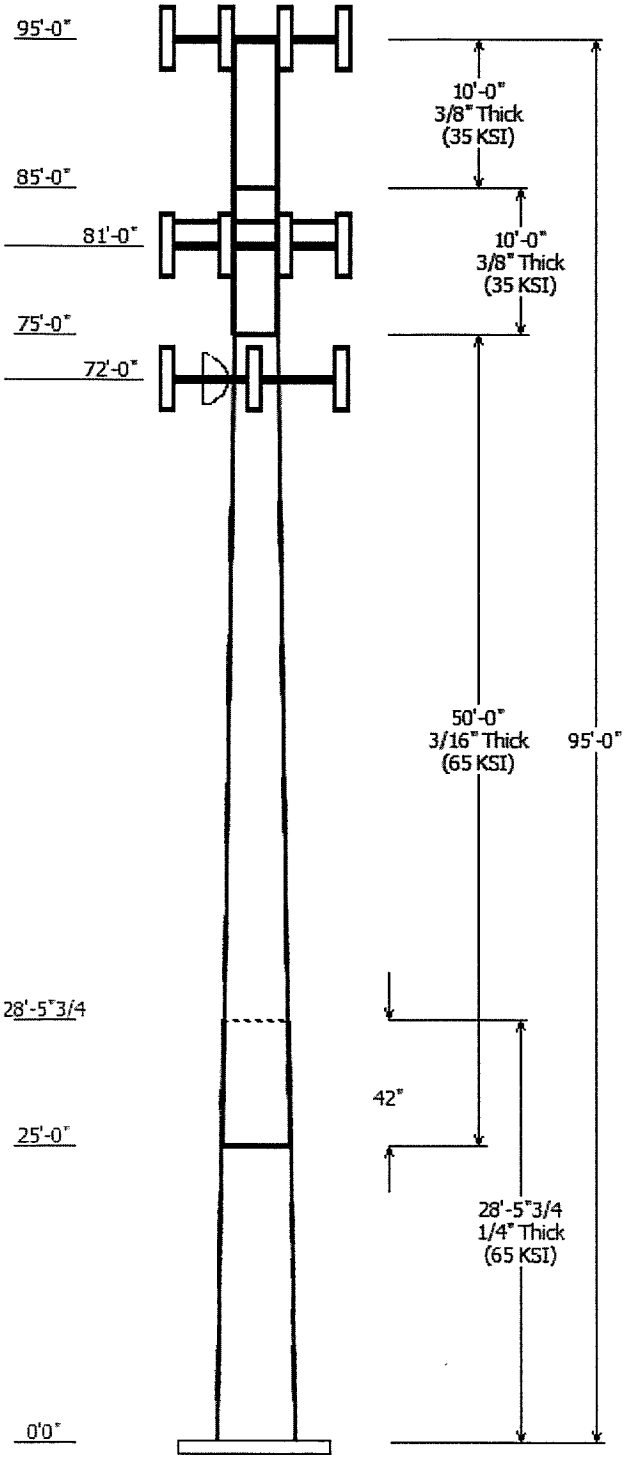

Reactions			
Load Case	Moment (kip-ft)	Shear (kip)	Axial (kip)
1.2D + 1.6W	945.20	12.10	17.70
0.9D + 1.6W	927.15	12.08	13.27
1.2D + 1.0Di + 1.0Wi	195.01	2.41	32.54
(1.2 + 0.2Sds) * DL + E ELFM	37.18	0.45	13.82
(1.2 + 0.2Sds) * DL + E EMAM	145.50	1.63	17.85
(0.9 - 0.2Sds) * DL + E ELFM	36.57	0.45	9.33
(0.9 - 0.2Sds) * DL + E EMAM	141.50	1.63	12.06
1.0D + 1.0W	259.86	3.36	14.78

Dish Deflections			
Load Case	Attach Elev (ft)	Deflection (in)	Rotation (deg)
1.0D + 1.0W	72.00	13.716	1.871

Site Number:	274392	Code: ANSI/TIA-222-G	© 2007 - 2015 by ATC IP LLC. All rights reserved.
Site Name:	Brookfield VT, VT	Engineering Number: 56107824	6/3/2015 4:41:45 PM
Customer:	Verizon Wireless		

Analysis Parameters

Location:	Orange County, VT		
Code:	ANSI/TIA-222-G	Height (ft):	95
Shape:	18 Sides. Sect 3: Round. Sect 4: Round	Base Diameter (in):	32.33
Pole Type:	Custom	Top Diameter (in):	18.00
Pole Manfacturer:	Nello Corp	Taper (in/ft) :	0.196

Ice & Wind Parameters

Structure Class:	II	Design Wind Speed Without Ice:	90 mph
Exposure Catagory:	B	Design Wind Speed With Ice:	40 mph
Topographic Catagory:	1	Operational Wind Speed:	60 mph
Crest Height:	0.0 ft	Design Ice Thickness:	0.00 in

Seismic Parameters

Analysis Method: Equivalent Modal Analysis & Equivalent Lateral Force Methods

Site Class: D - Stiff Soil

Period Based on Rayleigh Method (sec): 2.44

T_L (sec):	6	p:	1.3	C_s:	0.030
S_s:	0.250	S_1:	0.088	C_s Max:	0.030
F_a:	1.600	F_v:	1.600	C_s Min:	0.030
S_{ds}:	0.267	S_{d1}:	0.094		

Load Cases

1.2D + 1.6W	90 mph with No Ice
0.9D + 1.6W	90 mph with No Ice (Reduced DL)
1.2D + 1.0Di + 1.0Wi	40 mph with 0.75 in Radial Ice
(1.2 + 0.2Sds) * DL + E ELFM	Seismic Equivalent Lateral Forces Method
(1.2 + 0.2Sds) * DL + E EMAM	Seismic Equivalent Modal Analysis Method
(0.9 - 0.2Sds) * DL + E ELFM	Seismic (Reduced DL) Equivalent Lateral Forces Method
(0.9 - 0.2Sds) * DL + E EMAM	Seismic (Reduced DL) Equivalent Modal Analysis Method
1.0D + 1.0W	Serviceability 60 mph

© 2007 - 2015 by ATC IP LLC. All rights reserved.

Shaft Section Properties

Sect Info	Length (ft)	Thick (in)	Fy (ksi)	Joint Type	Slip Joint Len (in)	Weight (lb)	Bottom Dia (in)	Bottom Elev (ft)	Bottom Area (in²)	Bottom Ix (in⁴)	Bottom W/t Ratio	Bottom D/t Ratio	Top Dia (in)	Top Elev (ft)	Top Area (in²)	Top Ix (in⁴)	Top W/t Ratio	Top D/t Ratio	Taper (in/ft)
1-18	28.480	0.2500	65		0.00	2,252	32.32	0.00	25.45	3308.1	21.39	129.30	26.74	28.48	21.02	1864.1	17.45	106.97	0.196000
2-18	50.000	0.1875	65	Slip	41.76	2,300	27.80	25.00	16.43	1582.9	24.73	148.27	18.00	75.00	10.60	424.9	15.52	96.00	0.196000
3-R	10.000	0.3750	35	Butt	0.00	707	18.00	75.00	20.76	806.9	0.00	48.00	18.00	85.00	20.76	806.9	0.00	48.00	0.000000
4-R	10.000	0.3750	35	Butt	0.00	707	18.00	85.00	20.76	806.9	0.00	48.00	18.00	95.00	20.76	806.9	0.00	48.00	0.000000
				Shaft Weight		5,965													

Discrete Appurtenance Properties

Attach Elev (ft)	Description	Qty	No Ice Weight (lb)	No Ice EPAa (sf)	No Ice Orientation Factor	Ice Weight (lb)	Ice EPAa (sf)	Ice Orientation Factor	Distance From Face (ft)	Vert Ecc (ft)
95.00	Alcatel-Lucent RRH2x60 700	3	56.70	2.150	0.50	133.37	2.743	0.50	0.000	0.000
95.00	Alcatel-Lucent RRH2X60-	3	44.00	1.880	0.50	109.18	2.442	0.50	0.000	0.000
95.00	Flat Low Profile Platform	1	1500.00	26.100	1.00	2,118.58	44.328	1.00	0.000	0.000
95.00	Kathrein 800 10735	6	28.70	8.640	0.63	197.38	9.907	0.63	0.000	0.000
95.00	Kathrein Scala 800 10510V01	6	37.50	6.180	0.59	159.11	7.216	0.59	0.000	0.000
95.00	RFS DB-T1-6Z-8AB-0Z	1	44.00	4.800	0.50	179.79	5.630	0.50	0.000	0.000
81.00	14" x 9" TTA	6	10.00	1.050	0.33	49.39	1.473	0.33	0.000	1.000
81.00	Andrew SBNH-1D6565C	12	60.80	11.450	0.70	305.74	13.002	0.70	0.000	0.000
81.00	Ericsson RRUS-11	15	55.00	3.790	0.50	152.55	4.526	0.50	0.000	0.000
81.00	Flat Light Sector Frame	3	400.00	17.900	0.67	683.38	32.107	0.67	0.000	0.000
81.00	Raycap DC6-48-60-18-8F	3	20.00	1.110	1.00	94.61	2.483	1.00	0.000	0.000
72.00	3' Grid Dish	1	40.00	4.200	1.00	164.14	30.868	1.00	0.000	0.000
72.00	82" x 9" Panel	9	35.00	7.540	0.67	193.89	8.856	0.67	0.000	0.000
72.00	Round Low Profile Platform	1	1500.00	21.700	1.00	2,102.43	39.552	1.00	0.000	0.000
72.00	TTA	9	10.00	1.200	0.33	51.53	1.629	0.33	0.000	0.000
	Totals	79	7062.90			18,227.67			Number of Loadings :	15

Linear Appurtenance Properties

Elev From (ft)	Elev To (ft)	Qty	Description	Coax Diameter (in)	Coax Weight (lb/ft)	Flat	Protected Width (in)	Exposed To Wind	Carrier
0.00	95.00	2	1 5/8" Fiber	1.63	1.61	N	0.00	N	Verizon Wireless
0.00	81.00	1	0.53" Hybrid	0.53	0.00	N	0.00	N	AT&T Mobility
0.00	81.00	6	0.78" 8 AWG 6	0.78	0.59	N	0.00	N	AT&T Mobility
0.00	81.00	1	1/2" Coax	0.63	0.15	N	0.00	N	AT&T Mobility
0.00	81.00	3	3/8" Coax	0.44	0.08	N	0.00	N	AT&T Mobility
0.00	72.00	19	1 5/8" Coax	1.98	0.82	N	0.00	N	T-Mobile

© 2007 - 2015 by ATC IP LLC. All rights reserved.

Segment Properties (Max Len : 5.ft)

Seg Top Elev (ft)	Description	Thick (in)	Flat Dia (in)	Area (in^2)	Ix (in^4)	W/t Ratio	D/t Ratio	Fy (ksi)	S (in^3)	Z (in^3)	Weight (lb)
0.00		0.2500	32.325	25.451	3,308.1	21.39	129.30	76.2	201.6	0.0	0.0
5.00		0.2500	31.345	24.673	3,014.1	20.70	125.38	77.1	189.4	0.0	426.4
10.00		0.2500	30.365	23.895	2,738.0	20.01	121.46	77.9	177.6	0.0	413.2
15.00		0.2500	29.385	23.118	2,479.3	19.31	117.54	78.7	166.2	0.0	399.9
20.00		0.2500	28.405	22.340	2,237.4	18.62	113.62	79.5	155.1	0.0	386.7
25.00	Bot - Section 2	0.2500	27.425	21.563	2,011.8	17.93	109.70	80.3	144.5	0.0	373.5
28.48	Top - Section 1	0.1875	27.118	16.026	1,468.5	24.09	144.63	73.1	106.7	0.0	444.3
30.00		0.1875	26.820	15.849	1,420.3	23.81	143.04	73.4	104.3	0.0	82.4
35.00		0.1875	25.840	15.266	1,269.2	22.89	137.81	74.5	96.7	0.0	264.7
40.00		0.1875	24.860	14.683	1,129.2	21.97	132.59	75.6	89.5	0.0	254.8
45.00		0.1875	23.880	14.099	999.9	21.05	127.36	76.6	82.5	0.0	244.8
50.00		0.1875	22.900	13.516	880.9	20.12	122.13	77.7	75.8	0.0	234.9
55.00		0.1875	21.920	12.933	771.7	19.20	116.91	78.8	69.3	0.0	225.0
60.00		0.1875	20.940	12.350	672.0	18.28	111.68	79.9	63.2	0.0	215.1
65.00		0.1875	19.960	11.767	581.2	17.36	106.45	81.0	57.4	0.0	205.2
70.00		0.1875	18.980	11.183	499.0	16.44	101.23	82.1	51.8	0.0	195.2
72.00		0.1875	18.588	10.950	468.4	16.07	99.14	82.5	49.6	0.0	75.3
75.00	Top - Section 2	0.1875	18.000	10.600	424.9	15.52	96.00	82.6	46.5	0.0	110.0
75.00	Bot - Section 3	0.3750	18.000	20.764	806.9	0.00	48.00	35.0	89.7	116.5	
80.00		0.3750	18.000	20.764	806.9	0.00	48.00	35.0	89.7	116.5	353.3
81.00		0.3750	18.000	20.764	806.9	0.00	48.00	35.0	89.7	116.5	70.7
85.00	Top - Section 3	0.3750	18.000	20.764	806.9	0.00	48.00	35.0	89.7	116.5	282.6
85.00	Bot - Section 4	0.3750	18.000	20.764	806.9	0.00	48.00	35.0	89.7	116.5	
90.00		0.3750	18.000	20.764	806.9	0.00	48.00	35.0	89.7	116.5	353.3
95.00		0.3750	18.000	20.764	806.9	0.00	48.00	35.0	89.7	116.5	353.3
											5,964.6

Site Number: 274392 | Code: ANSI/TIA-222-G | © 2007 - 2015 by ATC IP LLC. All rights reserved.

Site Name: Brookfield VT, VT | Engineering Number: 56107824 | 6/3/2015 4:41:45 PM

Customer: Verizon Wireless

Load Case: 1.2D + 1.6W | 90 mph with No Ice | 25 Iterations

Gust Response Factor : 1.10
Dead Load Factor : 1.20
Wind Load Factor : 1.60

Wind Importance Factor : 1.00

Applied Segment Forces Summary

		Shaft Forces		Discrete Forces				Linear Forces		Sum of Forces			
Seg Elev (ft)	Description	Wind FX (lb)	Dead Load (lb)	Wind FX (lb)	Torsion MY (lb-ft)	Moment MZ (lb-ft)	Dead Load (lb)	Wind FX (lb)	Dead Load (lb)	Wind FX (lb)	Dead Load (lb)	Torsion MY (lb-ft)	Moment MZ (lb)
0.00		106.2	0.0					0.0	0.0	106.2	0.0	0.0	0.0
5.00		209.2	511.7					0.0	137.3	209.2	649.0	0.0	0.0
10.00		202.7	495.8					0.0	137.3	202.7	633.1	0.0	0.0
15.00		196.1	479.9					0.0	137.3	196.1	617.2	0.0	0.0
20.00		189.6	464.1					0.0	137.3	189.6	601.3	0.0	0.0
25.00	Bot - Section 2	156.9	448.2					0.0	137.3	156.9	585.5	0.0	0.0
28.48	Top - Section 1	91.1	533.2					0.0	95.5	91.1	628.7	0.0	0.0
30.00		117.3	98.9					0.0	41.7	117.3	140.7	0.0	0.0
35.00		180.2	317.6					0.0	137.3	180.2	454.9	0.0	0.0
40.00		180.2	305.7					0.0	137.3	180.2	443.0	0.0	0.0
45.00		179.0	293.8					0.0	137.3	179.0	431.1	0.0	0.0
50.00		176.9	281.9					0.0	137.3	176.9	419.2	0.0	0.0
55.00		174.0	270.0					0.0	137.3	174.0	407.3	0.0	0.0
60.00		170.4	258.1					0.0	137.3	170.4	395.4	0.0	0.0
65.00		166.2	246.2					0.0	137.3	166.2	383.5	0.0	0.0
70.00		114.1	234.3					0.0	137.3	114.1	371.6	0.0	0.0
72.00	Appertunance(s)	79.5	90.4	2,005.2	0.0	0.0	2,334.0	0.0	54.9	2,084.7	2,479.3	0.0	0.0
75.00	Top - Section 2	119.0	132.0					0.0	26.3	119.0	158.3	0.0	0.0
80.00		86.2	423.9					0.0	43.8	86.2	467.7	0.0	0.0
81.00	Appertunance(s)	73.0	84.8	4,226.2	0.0	53.8	3,449.5	0.0	8.8	4,299.1	3,543.1	0.0	0.0
85.00	Top - Section 3	132.7	339.1					0.0	15.5	132.7	354.6	0.0	0.0
90.00		149.6	423.9					0.0	19.3	149.6	443.3	0.0	0.0
95.00	Appertunance(s)	75.4	423.9	2,582.5	0.0	0.0	2,692.0	0.0	19.3	2,657.8	3,135.2	0.0	0.0
									Totals:	12,139.4	17,742.7	0.00	0.00

Site Number: 274392 | Code: ANSI/TIA-222-G | © 2007 - 2015 by ATC IP LLC. All rights reserved.

Site Name: Brookfield VT, VT | Engineering Number: 56107824 | 6/3/2015 4:41:46 PM

Customer: Verizon Wireless

Load Case: 1.2D + 1.6W | 90 mph with No Ice | 25 Iterations

Gust Response Factor : 1.10 | Wind Importance Factor : 1.00

Dead Load Factor : 1.20

Wind Load Factor : 1.60

Calculated Forces

Seg Elev (ft)	Pu FY (-) (kips)	Vu FX (-) (kips)	Tu MY (ft-kips)	Mu MZ (ft-kips)	Mu MX (ft-kips)	Resultant Moment (ft-kips)	phi Pn (kips)	phi Vn (kips)	phi Tn (ft-kips)	phi Mn (ft-kips)	Total Deflect (in)	Rotation (deg)	Ratio
0.00	-17.70	-12.10	0.00	-945.20	0.00	945.20	1,746.41	873.21	2,301.86	1,152.64	0.00	0.00	0.830
5.00	-16.97	-12.00	0.00	-884.72	0.00	884.72	1,711.10	855.55	2,185.89	1,094.57	0.21	-0.39	0.818
10.00	-16.25	-11.91	0.00	-824.71	0.00	824.71	1,674.66	837.33	2,071.37	1,037.22	0.84	-0.80	0.805
15.00	-15.55	-11.82	0.00	-765.17	0.00	765.17	1,637.08	818.54	1,958.45	980.68	1.89	-1.21	0.790
20.00	-14.87	-11.72	0.00	-706.09	0.00	706.09	1,598.36	799.18	1,847.26	925.00	3.39	-1.63	0.773
25.00	-14.22	-11.64	0.00	-647.49	0.00	647.49	1,558.50	779.25	1,737.95	870.27	5.33	-2.06	0.753
28.48	-13.55	-11.58	0.00	-606.99	0.00	606.99	1,053.87	526.94	1,167.23	584.48	6.94	-2.37	1.052
30.00	3.3	-11.53				589.39			1,146.61	574.15	7.72	-2.51	1.040
35.00	-12.78	-11.46	0.00	-531.72	0.00	531.72	1,023.28	511.64	1,079.20	540.40	10.65	-3.07	0.997
40.00	-12.24	-11.37	0.00	-474.43	0.00	474.43	998.51	499.26	1,012.55	507.03	14.17	-3.63	0.948
45.00	-11.71	-11.28	0.00	-417.56	0.00	417.56	972.61	486.30	946.81	474.11	18.27	-4.20	0.893
50.00	-11.20	-11.18	0.00	-361.16	0.00	361.16	945.56	472.78	882.11	441.71	22.96	-4.75	0.830
55.00	-10.71	-11.07	0.00	-305.26	0.00	305.26	917.38	458.69	818.59	409.90	28.23	-5.29	0.757
60.00	-10.24	-10.95	0.00	-249.92	0.00	249.92	888.06	444.03	756.39	378.76	34.03	-5.80	0.672
65.00	-9.79	-10.82	0.00	-195.17	0.00	195.17	857.60	428.80	695.64	348.34	40.36	-6.27	0.572
70.00	-9.39	-10.71	0.00	-141.08	0.00	141.08	826.01	413.00	636.49	318.72	47.14	-6.68	0.455
72.00	-7.14	-8.37	0.00	-119.66	0.00	119.66	813.05	406.52	613.31	307.11	49.97	-6.83	0.399
75.00	-6.97	-8.26	0.00	-94.56	0.00	94.56	787.55	393.77	574.90	287.88	54.31	-7.03	0.338
75.00	-6.97	-8.26	0.00	-94.56	0.00	94.56	654.06	327.03	470.04	305.83	54.31	-7.03	0.320
80.00	-6.50	-8.13	0.00	-53.26	0.00	53.26	654.06	327.03	470.04	305.83	61.80	-7.27	0.185
81.00	-3.53	-3.42	0.00	-45.08	0.00	45.08	654.06	327.03	470.04	305.83	63.32	-7.29	0.153
85.00	-3.19	-3.24	0.00	-31.41	0.00	31.41	654.06	327.03	470.04	305.83	69.44	-7.35	0.108
85.00	-3.19	-3.24	0.00	-31.41	0.00	31.41	654.06	327.03	470.04	305.83	69.44	-7.35	0.108
90.00	-2.77	-3.04	0.00	-15.20	0.00	15.20	654.06	327.03	470.04	305.83	77.13	-7.39	0.054
95.00	0.00	-2.66	0.00	0.00	0.00	0.00	654.06	327.03	470.04	305.83	84.86	-7.40	0.000

© 2007 - 2015 by ATC IP LLC. All rights reserved.

Load Case: 0.9D + 1.6W 90 mph with No Ice (Reduced DL) 24 Iterations

Gust Response Factor : 1.10
Dead Load Factor : 0.90
Wind Load Factor : 1.60

Wind Importance Factor : 1.00

Applied Segment Forces Summary

		Shaft Forces		Discrete Forces				Linear Forces		Sum of Forces			
Seg Elev (ft)	Description	Wind FX (lb)	Dead Load (lb)	Wind FX (lb)	Torsion MY (lb-ft)	Moment MZ (lb-ft)	Dead Load (lb)	Wind FX (lb)	Dead Load (lb)	Wind FX (lb)	Dead Load (lb)	Torsion MY (lb-ft)	Moment MZ (lb)
0.00		106.2	0.0					0.0	0.0	106.2	0.0	0.0	0.0
5.00		209.2	383.8					0.0	103.0	209.2	486.7	0.0	0.0
10.00		202.7	371.9					0.0	103.0	202.7	474.8	0.0	0.0
15.00		196.1	359.9					0.0	103.0	196.1	462.9	0.0	0.0
20.00		189.6	348.0					0.0	103.0	189.6	451.0	0.0	0.0
25.00	Bot - Section 2	156.9	336.1					0.0	103.0	156.9	439.1	0.0	0.0
28.48	Top - Section 1	91.1	399.9					0.0	71.7	91.1	471.5	0.0	0.0
30.00		117.3	74.2					0.0	31.3	117.3	105.5	0.0	0.0
35.00		180.2	238.2					0.0	103.0	180.2	341.2	0.0	0.0
40.00		180.2	229.3					0.0	103.0	180.2	332.3	0.0	0.0
45.00		179.0	220.4					0.0	103.0	179.0	323.3	0.0	0.0
50.00		176.9	211.4					0.0	103.0	176.9	314.4	0.0	0.0
55.00		174.0	202.5					0.0	103.0	174.0	305.5	0.0	0.0
60.00		170.4	193.6					0.0	103.0	170.4	296.5	0.0	0.0
65.00		166.2	184.6					0.0	103.0	166.2	287.6	0.0	0.0
70.00		114.1	175.7					0.0	103.0	114.1	278.7	0.0	0.0
72.00	Appertunance(s)	79.5	67.8	2,005.2	0.0	0.0	1,750.5	0.0	41.2	2,084.7	1,859.5	0.0	0.0
75.00	Top - Section 2	119.0	99.0					0.0	19.7	119.0	118.7	0.0	0.0
80.00		86.2	317.9					0.0	32.8	86.2	350.8	0.0	0.0
81.00	Appertunance(s)	73.0	63.6	4,226.2	0.0	53.8	2,587.1	0.0	6.6	4,299.1	2,657.3	0.0	0.0
85.00	Top - Section 3	132.7	254.4					0.0	11.6	132.7	266.0	0.0	0.0
90.00		149.6	317.9					0.0	14.5	149.6	332.4	0.0	0.0
95.00	Appertunance(s)	75.4	317.9	2,582.5	0.0	0.0	2,019.0	0.0	14.5	2,657.8	2,351.4	0.0	0.0
									Totals:	12,139.4	13,307.0	0.00	0.00

Site Number: 274392 | Code: ANSI/TIA-222-G | © 2007 - 2015 by ATC IP LLC. All rights reserved.

Site Name: Brookfield VT, VT | Engineering Number: 56107824 | 6/3/2015 4:41:47 PM

Customer: Verizon Wireless

Load Case: 0.9D + 1.6W | 90 mph with No Ice (Reduced DL) | 24 Iterations

Gust Response Factor : 1.10 | Wind Importance Factor : 1.00

Dead Load Factor : 0.90

Wind Load Factor : 1.60

Calculated Forces

Seg Elev (ft)	Pu FY (-) (kips)	Vu FX (-) (kips)	Tu MY (ft-kips)	Mu MZ (ft-kips)	Mu MX (ft-kips)	Resultant Moment (ft-kips)	phi Pn (kips)	phi Vn (kips)	phi Tn (ft-kips)	phi Mn (ft-kips)	Total Deflect (in)	Rotation (deg)	Ratio
0.00	-13.27	-12.08	0.00	-927.15	0.00	927.15	1,746.41	873.21	2,301.86	1,152.64	0.00	0.00	0.812
5.00	-12.70	-11.95	0.00	-866.76	0.00	866.76	1,711.10	855.55	2,185.89	1,094.57	0.21	-0.39	0.799
10.00	-12.14	-11.83	0.00	-806.99	0.00	806.99	1,674.66	837.33	2,071.37	1,037.22	0.82	-0.78	0.785
15.00	-11.60	-11.71	0.00	-747.83	0.00	747.83	1,637.08	818.54	1,958.45	980.68	1.85	-1.18	0.770
20.00	-11.07	-11.59	0.00	-689.28	0.00	689.28	1,598.36	799.18	1,847.26	925.00	3.32	-1.60	0.752
25.00	-10.56	-11.49	0.00	-631.33	0.00	631.33	1,558.50	779.25	1,737.95	870.27	5.21	-2.02	0.732
28.48		11.42		591.36		591.36	1,053.8			584.			.022
	9.8		.00		0.0					574.			.010
35.00	-9.45	-11.25	0.00	-517.24	0.00	517.24	1,023.28	511.64	1,079.20	540.40	10.42	-3.00	0.967
40.00	-9.02	-11.14	0.00	-461.00	0.00	461.00	998.51	499.26	1,012.55	507.03	13.85	-3.55	0.919
45.00	-8.60	-11.02	0.00	-405.32	0.00	405.32	972.61	486.30	946.81	474.11	17.86	-4.09	0.864
50.00	-8.20	-10.89	0.00	-350.23	0.00	350.23	945.56	472.78	882.11	441.71	22.43	-4.63	0.802
55.00	-7.82	-10.76	0.00	-295.76	0.00	295.76	917.38	458.69	818.59	409.90	27.56	-5.15	0.731
60.00	-7.45	-10.63	0.00	-241.94	0.00	241.94	888.06	444.03	756.39	378.76	33.22	-5.65	0.648
65.00	-7.10	-10.49	0.00	-188.79	0.00	188.79	857.60	428.80	695.64	348.34	39.37	-6.10	0.551
70.00	-6.79	-10.38	0.00	-136.35	0.00	136.35	826.01	413.00	636.49	318.72	45.97	-6.50	0.437
72.00	-5.16	-8.11	0.00	-115.60	0.00	115.60	813.05	406.52	613.31	307.11	48.72	-6.64	0.383
75.00	-5.03	-7.99	0.00	-91.28	0.00	91.28	787.55	393.77	574.90	287.88	52.95	-6.83	0.324
75.00	-5.03	-7.99	0.00	-91.28	0.00	91.28	654.06	327.03	470.04	305.83	52.95	-6.83	0.307
80.00	-4.67	-7.88	0.00	-51.32	0.00	51.32	654.06	327.03	470.04	305.83	60.23	-7.07	0.176
81.00	-2.56	-3.28	0.00	-43.39	0.00	43.39	654.06	327.03	470.04	305.83	61.71	-7.09	0.146
85.00	-2.31	-3.12	0.00	-30.26	0.00	30.26	654.06	327.03	470.04	305.83	67.65	-7.14	0.103
85.00	-2.31	-3.12	0.00	-30.26	0.00	30.26	654.06	327.03	470.04	305.83	67.65	-7.14	0.103
90.00	-2.00	-2.93	0.00	-14.66	0.00	14.66	654.06	327.03	470.04	305.83	75.14	-7.18	0.051
95.00	0.00	-2.66	0.00	0.00	0.00	0.00	654.06	327.03	470.04	305.83	82.65	-7.19	0.000

Site Number: 274392 | Code: ANSI/TIA-222-G | © 2007 - 2015 by ATC IP LLC. All rights reserved.

Site Name: Brookfield VT, VT | Engineering Number: 56107824 | 6/3/2015 4:41:47 PM

Customer: Verizon Wireless

Load Case: 1.2D + 1.0Di + 1.0Wi — 40 mph with 0.75 in Radial Ice — 24 Iterations

Gust Response Factor : 1.10
Dead Load Factor : 1.20
Wind Load Factor : 1.00

Ice Dead Load Factor : 1.00

Wind Importance Factor : 1.00
Ice Importance Factor : 1.00

Applied Segment Forces Summary

		Shaft Forces		Discrete Forces				Linear Forces		Sum of Forces			
Seg Elev (ft)	Description	Wind FX (lb)	Dead Load (lb)	Wind FX (lb)	Torsion MY (lb-ft)	Moment MZ (lb-ft)	Dead Load (lb)	Wind FX (lb)	Dead Load (lb)	Wind FX (lb)	Dead Load (lb)	Torsion MY (lb-ft)	Moment MZ (lb)
0.00		26.0	0.0					0.0	0.0	26.0	0.0	0.0	0.0
5.00		51.4	747.6					0.0	137.3	51.4	884.9	0.0	0.0
10.00		50.2	752.3					0.0	137.3	50.2	889.5	0.0	0.0
15.00		48.8	742.0					0.0	137.3	48.8	879.3	0.0	0.0
20.00		47.5	726.9					0.0	137.3	47.5	864.2	0.0	0.0
25.00	Bot - Section 2	39.5	709.1					0.0	137.3	39.5	846.4	0.0	0.0
28.48	Top - Section 1	23.0	716.2					0.0	95.5	23.0	811.7	0.0	0.0
30.00		29.7	178.8					0.0	41.7	29.7	220.5	0.0	0.0
35.00		45.8	574.0					0.0	137.3	45.8	711.3	0.0	0.0
40.00		46.0	556.7					0.0	137.3	46.0	693.9	0.0	0.0
45.00		46.0	538.6					0.0	137.3	46.0	675.9	0.0	0.0
50.00		45.7	520.1					0.0	137.3	45.7	657.4	0.0	0.0
55.00		45.3	501.1					0.0	137.3	45.3	638.4	0.0	0.0
60.00		44.7	481.7					0.0	137.3	44.7	619.0	0.0	0.0
65.00		43.9	462.0					0.0	137.3	43.9	599.2	0.0	0.0
70.00		30.3	442.0					0.0	137.3	30.3	579.2	0.0	0.0
72.00	Appertunance(s)	21.2	172.3	426.8	0.0	0.0	4,624.3	0.0	54.9	448.1	4,851.5	0.0	0.0
75.00	Top - Section 2	33.6	251.8					0.0	26.3	33.6	278.0	0.0	0.0
80.00		25.1	619.8					0.0	43.8	25.1	663.6	0.0	0.0
81.00	Appertunance(s)	21.3	124.1	682.0	0.0	9.3	8,832.3	0.0	8.8	703.3	8,965.2	0.0	0.0
85.00	Top - Section 3	38.8	497.0					0.0	15.5	38.8	512.4	0.0	0.0
90.00		43.7	622.4					0.0	19.3	43.7	641.7	0.0	0.0
95.00	Appertunance(s)	22.1	623.6	430.2	0.0	0.0	5,413.6	0.0	19.3	452.2	6,056.5	0.0	0.0
									Totals:	2,408.51	32,539.7	0.00	0.00

 © 2007 - 2015 by ATC IP LLC. All rights reserved.

Load Case: 1.2D + 1.0Di + 1.0Wi 40 mph with 0.75 in Radial Ice 24 Iterations

Gust Response Factor : 1.10 Ice Dead Load Factor : 1.00 Wind Importance Factor : 1.00
Dead Load Factor : 1.20 Ice Importance Factor : 1.00
Wind Load Factor : 1.00

Calculated Forces

Seg Elev (ft)	Pu FY (-) (kips)	Vu FX (-) (kips)	Tu MY (ft-kips)	Mu MZ (ft-kips)	Mu MX (ft-kips)	Resultant Moment (ft-kips)	phi Pn (kips)	phi Vn (kips)	phi Tn (ft-kips)	phi Mn (ft-kips)	Total Deflect (in)	Rotation (deg)	Ratio
0.00	-32.54	-2.41	0.00	-195.01	0.00	195.01	1,746.41	873.21	2,301.86	1,152.64	0.00	0.00	0.188
5.00	-31.65	-2.40	0.00	-182.98	0.00	182.98	1,711.10	855.55	2,185.89	1,094.57	0.04	-0.08	0.186
10.00	-30.76	-2.39	0.00	-170.98	0.00	170.98	1,674.66	837.33	2,071.37	1,037.22	0.17	-0.16	0.183
15.00	-29.87	-2.39	0.00	-159.02	0.00	159.02	1,637.08	818.54	1,958.45	980.68	0.39	-0.25	0.180
20.00	-29.01	-2.38	0.00	-147.09	0.00	147.09	1,598.36	799.18	1,847.26	925.00	0.70	-0.34	0.177
25.00	-28.16	-2.37	0.00	-135.19	0.00	135.19	1,558.50	779.25	1,737.95	870.27	1.10	-0.43	0.173
28.48	-27.34	-2.36	0.00	-126.94	0.00	126.94	1,053.87	526.94	1,167.23	584.48	1.44	-0.49	0.243
30.00	-27.12	-2.37	0.00	-123.35	0.00	123.35	1,046.91	523.46	1,146.61	574.15	1.60	-0.52	0.241
35.00	-26.41	-2.37	0.00	-111.51	0.00	111.51	1,023.28	511.64	1,079.20	540.40	2.21	-0.64	0.232
40.00	-25.71	-2.37	0.00	-99.66	0.00	99.66	998.51	499.26	1,012.55	507.03	2.94	-0.76	0.222
45.00	-25.03	-2.36	0.00	-87.82	0.00	87.82	972.61	486.30	946.81	474.11	3.80	-0.88	0.211
50.00	-24.37	-2.36	0.00	-76.00	0.00	76.00	945.56	472.78	882.11	441.71	4.78	-0.99	0.198
55.00	-23.72	-2.34	0.00	-64.23	0.00	64.23	917.38	458.69	818.59	409.90	5.88	-1.11	0.183
60.00	-23.10	-2.33	0.00	-52.50	0.00	52.50	888.06	444.03	756.39	378.76	7.10	-1.21	0.165
65.00	-22.50	-2.31	0.00	-40.86	0.00	40.86	857.60	428.80	695.64	348.34	8.42	-1.31	0.144
70.00	-21.92	-2.29	0.00	-29.31	0.00	29.31	826.01	413.00	636.49	318.72	9.84	-1.40	0.119
72.00	-17.08	-1.73	0.00	-24.74	0.00	24.74	813.05	406.52	613.31	307.11	10.44	-1.43	0.102
75.00	-16.80	-1.70	0.00	-19.55	0.00	19.55	787.55	393.77	574.90	287.88	11.35	-1.47	0.089
75.00	-16.80	-1.70	0.00	-19.55	0.00	19.55	654.06	327.03	470.04	305.83	11.35	-1.47	0.090
80.00	-16.14	-1.67	0.00	-11.04	0.00	11.04	654.06	327.03	470.04	305.83	12.91	-1.52	0.061
81.00	-7.19	-0.73	0.00	-9.36	0.00	9.36	654.06	327.03	470.04	305.83	13.23	-1.52	0.042
85.00	-6.68	-0.68	0.00	-6.46	0.00	6.46	654.06	327.03	470.04	305.83	14.51	-1.53	0.031
85.00	-6.68	-0.68	0.00	-6.46	0.00	6.46	654.06	327.03	470.04	305.83	14.51	-1.53	0.031
90.00	-6.04	-0.62	0.00	-3.08	0.00	3.08	654.06	327.03	470.04	305.83	16.13	-1.54	0.019
95.00	0.00	-0.45	0.00	0.00	0.00	0.00	654.06	327.03	470.04	305.83	17.74	-1.55	0.000

Site Number: 274392 | Code: ANSI/TIA-222-G | © 2007 - 2015 by ATC IP LLC. All rights reserved.

Site Name: Brookfield VT, VT | Engineering Number: 56107824 | 6/3/2015 4:41:48 PM

Customer: Verizon Wireless

Load Case: 1.0D + 1.0W | Serviceability 60 mph | 23 Iterations

Gust Response Factor : 1.10 | Wind Importance Factor : 1.00

Dead Load Factor : 1.00

Wind Load Factor : 1.00

Applied Segment Forces Summary

		Shaft Forces		Discrete Forces				Linear Forces		Sum of Forces			
Seg Elev (ft)	Description	Wind FX (lb)	Dead Load (lb)	Wind FX (lb)	Torsion MY (lb-ft)	Moment MZ (lb-ft)	Dead Load (lb)	Wind FX (lb)	Dead Load (lb)	Wind FX (lb)	Dead Load (lb)	Torsion MY (lb-ft)	Moment MZ (lb)
0.00		29.5	0.0					0.0	0.0	29.5	0.0	0.0	0.0
5.00		58.1	426.4					0.0	114.4	58.1	540.8	0.0	0.0
10.00		56.3	413.2					0.0	114.4	56.3	527.6	0.0	0.0
15.00		54.5	399.9					0.0	114.4	54.5	514.3	0.0	0.0
20.00		52.7	386.7					0.0	114.4	52.7	501.1	0.0	0.0
25.00	Bot - Section 2	43.6	373.5					0.0	114.4	43.6	487.9	0.0	0.0
28.48	Top - Section 1	25.3	444.3					0.0	79.6	25.3	523.9	0.0	0.0
30.00		32.6	82.4					0.0	34.8	32.6	117.2	0.0	0.0
35.00		50.1	264.7					0.0	114.4	50.1	379.1	0.0	0.0
40.00		50.0	254.8					0.0	114.4	50.0	369.2	0.0	0.0
45.00		49.7	244.8					0.0	114.4	49.7	359.2	0.0	0.0
50.00		49.1	234.9					0.0	114.4	49.1	349.3	0.0	0.0
55.00		48.3	225.0					0.0	114.4	48.3	339.4	0.0	0.0
60.00		47.3	215.1					0.0	114.4	47.3	329.5	0.0	0.0
65.00		46.2	205.2					0.0	114.4	46.2	319.6	0.0	0.0
70.00		31.7	195.2					0.0	114.4	31.7	309.6	0.0	0.0
72.00	Appertunance(s)	22.1	75.3	557.0	0.0	0.0	1,945.0	0.0	45.8	579.1	2,066.1	0.0	0.0
75.00	Top - Section 2	33.1	110.0					0.0	21.9	33.1	131.9	0.0	0.0
80.00		23.9	353.3					0.0	36.5	23.9	389.8	0.0	0.0
81.00	Appertunance(s)	20.3	70.7	1,173.9	0.0	15.0	2,874.6	0.0	7.3	1,194.2	2,952.6	0.0	0.0
85.00	Top - Section 3	36.9	282.6					0.0	12.9	36.9	295.5	0.0	0.0
90.00		41.6	353.3					0.0	16.1	41.6	369.4	0.0	0.0
95.00	Appertunance(s)	20.9	353.3	717.3	0.0	0.0	2,243.3	0.0	16.1	738.3	2,612.7	0.0	0.0
									Totals:	3,372.06	14,785.6	0.00	0.00

© 2007 - 2015 by ATC IP LLC. All rights reserved.

Load Case: 1.0D + 1.0W Serviceability 60 mph 23 Iterations

Gust Response Factor : 1.10 Wind Importance Factor : 1.00
Dead Load Factor : 1.00
Wind Load Factor : 1.00

Calculated Forces

Seg Elev (ft)	Pu FY (-) (kips)	Vu FX (-) (kips)	Tu MY (ft-kips)	Mu MZ (ft-kips)	Mu MX (ft-kips)	Resultant Moment (ft-kips)	phi Pn (kips)	phi Vn (kips)	phi Tn (ft-kips)	phi Mn (ft-kips)	Total Deflect (in)	Rotation (deg)	Ratio
0.00	-14.78	-3.36	0.00	-259.86	0.00	259.86	1,746.41	873.21	2,301.86	1,152.64	0.00	0.00	0.234
5.00	-14.24	-3.32	0.00	-243.08	0.00	243.08	1,711.10	855.55	2,185.89	1,094.57	0.06	-0.11	0.230
10.00	-13.70	-3.29	0.00	-226.46	0.00	226.46	1,674.66	837.33	2,071.37	1,037.22	0.23	-0.22	0.227
15.00	-13.18	-3.26	0.00	-209.99	0.00	209.99	1,637.08	818.54	1,958.45	980.68	0.52	-0.33	0.222
20.00	-12.67	-3.23	0.00	-193.67	0.00	193.67	1,598.36	799.18	1,847.26	925.00	0.93	-0.45	0.217
25.00	-12.18	-3.21	0.00	-177.51	0.00	177.51	1,558.50	779.25	1,737.95	870.27	1.46	-0.57	0.212
28.48	-11.65	-3.19	0.00	-166.35	0.00	166.35	1,053.87	526.94	1,167.23	584.48	1.91	-0.65	0.296
30.00	-11.53	-3.17	0.00	-161.50	0.00	161.50	1,046.91	523.46	1,146.61	574.15	2.12	-0.69	0.292
35.00	-11.14	-3.15	0.00	-145.63	0.00	145.63	1,023.28	511.64	1,079.20	540.40	2.92	-0.84	0.280
40.00	-10.77	-3.12	0.00	-129.89	0.00	129.89	998.51	499.26	1,012.55	507.03	3.89	-1.00	0.267
45.00	-10.40	-3.09	0.00	-114.28	0.00	114.28	972.61	486.30	946.81	474.11	5.02	-1.15	0.252
50.00	-10.05	-3.06	0.00	-98.82	0.00	98.82	945.56	472.78	882.11	441.71	6.30	-1.30	0.234
55.00	-9.70	-3.03	0.00	-83.50	0.00	83.50	917.38	458.69	818.59	409.90	7.75	-1.45	0.214
60.00	-9.36	-3.00	0.00	-68.35	0.00	68.35	888.06	444.03	756.39	378.76	9.34	-1.59	0.191
65.00	-9.04	-2.96	0.00	-53.37	0.00	53.37	857.60	428.80	695.64	348.34	11.08	-1.72	0.164
70.00	-8.73	-2.93	0.00	-38.57	0.00	38.57	826.01	413.00	636.49	318.72	12.94	-1.83	0.132
72.00	-6.68	-2.29	0.00	-32.71	0.00	32.71	813.05	406.52	613.31	307.11	13.72	-1.87	0.115
75.00	-6.55	-2.26	0.00	-25.84	0.00	25.84	787.55	393.77	574.90	287.88	14.91	-1.92	0.098
75.00	-6.55	-2.26	0.00	-25.84	0.00	25.84	654.06	327.03	470.04	305.83	14.91	-1.92	0.095
80.00	-6.16	-2.23	0.00	-14.54	0.00	14.54	654.06	327.03	470.04	305.83	16.96	-1.99	0.057
81.00	-3.25	-0.93	0.00	-12.29	0.00	12.29	654.06	327.03	470.04	305.83	17.38	-2.00	0.045
85.00	-2.95	-0.88	0.00	-8.57	0.00	8.57	654.06	327.03	470.04	305.83	19.06	-2.01	0.033
85.00	-2.95	-0.88	0.00	-8.57	0.00	8.57	654.06	327.03	470.04	305.83	19.06	-2.01	0.033
90.00	-2.58	-0.83	0.00	-4.15	0.00	4.15	654.06	327.03	470.04	305.83	21.17	-2.02	0.018
95.00	0.00	-0.74	0.00	0.00	0.00	0.00	654.06	327.03	470.04	305.83	23.29	-2.03	0.000

© 2007 - 2015 by ATC IP LLC. All rights reserved.

Equivalent Lateral Forces Method Analysis

(Based on ASCE7-10 Chapters 11, 12, 15)

Spectral Response Acceleration for Short Period (S_s):	0.25	
Spectral Response Acceleration at 1.0 Second Period (S_1):	0.09	
Long-Period Transition Period (T_L):	6	
Importance Factor (I_E):	1.00	
Site Coefficient F_a:	1.60	
Site Coeffiecient F_v:	1.60	
Response Modification Coefficient (R):	1.50	
Design Spectral Response Acceleration at Short Period (S_{ds}):	0.27	
Design Spectral Response Acceleration at 1.0 Second Period (S_{d1}):	0.09	
Seismic Response Coefficient (C_s):	0.03	
Upper Limit C_s	0.03	
Lower Limit C_s	0.03	
Period based on Rayleigh Method (sec):	2.44	
Redundancy Factor (p):	1.30	
Seismic Force Distribution Exponent (k):	1.97	
Total Unfactored Dead Load:	11.56	k
Seismic Base Shear (E):	0.45	k

Load Case (1.2 + 0.2Sds) * DL + E ELFM

Seismic Equivalent Lateral Forces Method

Segment	Height Above Base (ft)	Weight (lb)	W_z (lb-ft)	C_{vx}	Horizontal Force (lb)	Vertical Force (lb)
22	92.50	369	2,769	0.066	30	463
21	87.50	369	2,482	0.059	27	463
20	83.00	296	1,789	0.043	19	370
19	80.50	78	444	0.011	5	98
18	77.50	390	2,062	0.049	22	489
17	73.50	132	628	0.015	7	165
16	71.00	121	539	0.013	6	152
15	67.50	310	1,247	0.030	13	388
14	62.50	320	1,106	0.026	12	401
13	57.50	329	968	0.023	10	413
12	52.50	339	833	0.020	9	425
11	47.50	349	704	0.017	8	438
10	42.50	359	582	0.014	6	450
9	37.50	369	467	0.011	5	463
8	32.50	379	362	0.009	4	475
7	29.24	117	91	0.002	1	147
6	26.74	524	340	0.008	4	657
5	22.50	488	226	0.005	2	611
4	17.50	501	141	0.003	2	628
3	12.50	514	75	0.002	1	645
2	7.50	528	28	0.001	0	661
1	2.50	541	3	0.000	0	678
RFS DB-T1-6Z-8AB-0Z	95.00	44	348	0.008	4	55

© 2007 - 2015 by ATC IP LLC. All rights reserved.

Kathrein 800 10735	95.00	29	227	0.005	2	36
Alcatel-Lucent RRH2X	95.00	44	348	0.008	4	55
Alcatel-Lucent RRH2x	95.00	57	448	0.011	5	71
Kathrein Scala 800 1	95.00	38	296	0.007	3	47
Flat Low Profile Pla	95.00	1,500	11,852	0.283	128	1,880
Andrew SBNH-1D6565C	81.00	61	351	0.008	4	76
Ericsson RRUS-11	81.00	55	317	0.008	3	69
Flat Light Sector Fr	81.00	400	2,308	0.055	25	501
Raycap DC6-48-60-18-	81.00	20	115	0.003	1	25
14" x 9" TTA	81.00	10	58	0.001	1	13
82" x 9" Panel	72.00	35	160	0.004	2	44
TTA	72.00	10	46	0.001	0	13
3' Grid Dish	72.00	40	183	0.004	2	50
Round Low Profile Pl	72.00	1,500	6,863	0.164	74	1,880
		11,564	41,806	1.000	451	14,494

Load Case (0.9 - 0.2Sds) * DL + E ELFM **Seismic (Reduced DL) Equivalent Lateral Forces Method**

Segment	Height Above Base (ft)	Weight (lb)	W_z (lb-ft)	C_{vx}	Horizontal Force (lb)	Vertical Force (lb)
22	92.50	369	2,769	0.066	30	313
21	87.50	369	2,482	0.059	27	313
20	83.00	296	1,789	0.043	19	250
19	80.50	78	444	0.011	5	66
18	77.50	390	2,062	0.049	22	330
17	73.50	132	628	0.015	7	112
16	71.00	121	539	0.013	6	103
15	67.50	310	1,247	0.030	13	262
14	62.50	320	1,106	0.026	12	271
13	57.50	329	968	0.023	10	279
12	52.50	339	833	0.020	9	287
11	47.50	349	704	0.017	8	296
10	42.50	359	582	0.014	6	304
9	37.50	369	467	0.011	5	313
8	32.50	379	362	0.009	4	321
7	29.24	117	91	0.002	1	99
6	26.74	524	340	0.008	4	444
5	22.50	488	226	0.005	2	413
4	17.50	501	141	0.003	2	424
3	12.50	514	75	0.002	1	435
2	7.50	528	28	0.001	0	447
1	2.50	541	3	0.000	0	458
RFS DB-T1-6Z-8AB-0Z	95.00	44	348	0.008	4	37
Kathrein 800 10735	95.00	29	227	0.005	2	24
Alcatel-Lucent RRH2X	95.00	44	348	0.008	4	37
Alcatel-Lucent RRH2x	95.00	57	448	0.011	5	48
Kathrein Scala 800 1	95.00	38	296	0.007	3	32
Flat Low Profile Pla	95.00	1,500	11,852	0.283	128	1,270
Andrew SBNH-1D6565C	81.00	61	351	0.008	4	51
Ericsson RRUS-11	81.00	55	317	0.008	3	47
Flat Light Sector Fr	81.00	400	2,308	0.055	25	339
Raycap DC6-48-60-18-	81.00	20	115	0.003	1	17
14" x 9" TTA	81.00	10	58	0.001	1	8
82" x 9" Panel	72.00	35	160	0.004	2	30
TTA	72.00	10	46	0.001	0	8
3' Grid Dish	72.00	40	183	0.004	2	34
Round Low Profile Pl	72.00	1,500	6,863	0.164	74	1,270
		11,564	41,806	1.000	451	9,791

© 2007 - 2015 by ATC IP LLC. All rights reserved.

© 2007 - 2015 by ATC IP LLC. All rights reserved.

Load Case (1.2 + 0.2Sds) * DL + E ELFM **Seismic Equivalent Lateral Forces Method**

Calculated Forces

Seg Elev (ft)	Pu FY (-) (kips)	Vu FX (-) (kips)	Tu MY (ft-kips)	Mu MZ (ft-kips)	Mu MX (ft-kips)	Resultant Moment (ft-kips)	phi Pn (kips)	phi Vn (kips)	phi Tn (ft-kips)	phi Mn (ft-kips)	Total Deflect (in)	Rotation (deg)	Ratio
0.00	-13.82	-0.45	0.00	-37.18	0.00	37.18	1,746.41	873.21	2,301.86	1,152.64	0.00	0.00	0.040
5.00	-13.15	-0.46	0.00	-34.92	0.00	34.92	1,711.10	855.55	2,185.89	1,094.57	0.01	-0.02	0.040
10.00	-12.51	-0.46	0.00	-32.64	0.00	32.64	1,674.66	837.33	2,071.37	1,037.22	0.03	-0.03	0.039
15.00	-11.88	-0.46	0.00	-30.35	0.00	30.35	1,637.08	818.54	1,958.45	980.68	0.07	-0.05	0.038
20.00	-11.27	-0.46	0.00	-28.06	0.00	28.06	1,598.36	799.18	1,847.26	925.00	0.13	-0.06	0.037
25.00	-10.61	-0.46	0.00	-25.76	0.00	25.76	1,558.50	779.25	1,737.95	870.27	0.21	-0.08	0.036
28.48	-10.47	-0.46	0.00	-24.17	0.00	24.17	1,053.87	526.94	1,167.23	584.48	0.27	-0.09	0.051
30.00	-9.99	-0.46	0.00	-23.47	0.00	23.47	1,046.91	523.46	1,146.61	574.15	0.31	-0.10	0.050
35.00	-9.53	-0.45	0.00	-21.19	0.00	21.19	1,023.28	511.64	1,079.20	540.40	0.42	-0.12	0.049
40.00	-9.08	-0.45	0.00	-18.92	0.00	18.92	998.51	499.26	1,012.55	507.03	0.56	-0.14	0.046
45.00	-8.64	-0.44	0.00	-16.67	0.00	16.67	972.61	486.30	946.81	474.11	0.72	-0.17	0.044
50.00	-8.21	-0.44	0.00	-14.45	0.00	14.45	945.56	472.78	882.11	441.71	0.91	-0.19	0.041
55.00	-7.80	-0.43	0.00	-12.26	0.00	12.26	917.38	458.69	818.59	409.90	1.12	-0.21	0.038
60.00	-7.40	-0.42	0.00	-10.12	0.00	10.12	888.06	444.03	756.39	378.76	1.35	-0.23	0.035
65.00	-7.01	-0.40	0.00	-8.03	0.00	8.03	857.60	428.80	695.64	348.34	1.60	-0.25	0.031
70.00	-6.86	-0.40	0.00	-6.00	0.00	6.00	826.01	413.00	636.49	318.72	1.88	-0.27	0.027
72.00	-4.71	-0.31	0.00	-5.20	0.00	5.20	813.05	406.52	613.31	307.11	1.99	-0.27	0.023
75.00	-4.22	-0.28	0.00	-4.29	0.00	4.29	787.55	393.77	574.90	287.88	2.16	-0.28	0.020
75.00	-4.22	-0.28	0.00	-4.29	0.00	4.29	654.06	327.03	470.04	305.83	2.16	-0.28	0.020
80.00	-4.12	-0.28	0.00	-2.88	0.00	2.88	654.06	327.03	470.04	305.83	2.47	-0.29	0.016
81.00	-3.07	-0.22	0.00	-2.60	0.00	2.60	654.06	327.03	470.04	305.83	2.53	-0.30	0.013
85.00	-2.61	-0.19	0.00	-1.73	0.00	1.73	654.06	327.03	470.04	305.83	2.78	-0.30	0.010
85.00	-2.61	-0.19	0.00	-1.73	0.00	1.73	654.06	327.03	470.04	305.83	2.78	-0.30	0.010
90.00	-2.14	-0.16	0.00	-0.79	0.00	0.79	654.06	327.03	470.04	305.83	3.09	-0.30	0.006
95.00	0.00	-0.15	0.00	0.00	0.00	0.00	654.06	327.03	470.04	305.83	3.41	-0.30	0.000

© 2007 - 2015 by ATC IP LLC. All rights reserved.

Load Case (0.9 - 0.2Sds) * DL + E ELFM **Seismic (Reduced DL) Equivalent Lateral Forces Method**

Calculated Forces

Seg Elev (ft)	Pu FY (-) (kips)	Vu FX (-) (kips)	Tu MY (ft-kips)	Mu MZ (ft-kips)	Mu MX (ft-kips)	Resultant Moment (ft-kips)	phi Pn (kips)	phi Vn (kips)	phi Tn (ft-kips)	phi Mn (ft-kips)	Total Deflect (in)	Rotation (deg)	Ratio
0.00	-9.33	-0.45	0.00	-36.57	0.00	36.57	1,746.41	873.21	2,301.86	1,152.64	0.00	0.00	0.037
5.00	-8.89	-0.45	0.00	-34.31	0.00	34.31	1,711.10	855.55	2,185.89	1,094.57	0.01	-0.02	0.037
10.00	-8.45	-0.45	0.00	-32.04	0.00	32.04	1,674.66	837.33	2,071.37	1,037.22	0.03	-0.03	0.036
15.00	-8.03	-0.46	0.00	-29.77	0.00	29.77	1,637.08	818.54	1,958.45	980.68	0.07	-0.05	0.035
20.00	-7.61	-0.45	0.00	-27.49	0.00	27.49	1,598.36	799.18	1,847.26	925.00	0.13	-0.06	0.034
25.00	-7.17	-0.45	0.00	-25.22	0.00	25.22	1,558.50	779.25	1,737.95	870.27	0.21	-0.08	0.034
28.48	-7.07	-0.45	0.00	-23.64	0.00	23.64	1,053.87	526.94	1,167.23	584.48	0.27	-0.09	0.047
30.00	-6.75	-0.45	0.00	-22.96	0.00	22.96	1,046.91	523.46	1,146.61	574.15	0.30	-0.10	0.046
35.00	-6.44	-0.45	0.00	-20.71	0.00	20.71	1,023.28	511.64	1,079.20	540.40	0.41	-0.12	0.045
40.00	-6.13	-0.44	0.00	-18.48	0.00	18.48	998.51	499.26	1,012.55	507.03	0.55	-0.14	0.043
45.00	-5.84	-0.44	0.00	-16.27	0.00	16.27	972.61	486.30	946.81	474.11	0.71	-0.16	0.040
50.00	-5.55	-0.43	0.00	-14.09	0.00	14.09	945.56	472.78	882.11	441.71	0.89	-0.18	0.038
55.00	-5.27	-0.42	0.00	-11.95	0.00	11.95	917.38	458.69	818.59	409.90	1.10	-0.21	0.035
60.00	-5.00	-0.41	0.00	-9.86	0.00	9.86	888.06	444.03	756.39	378.76	1.32	-0.23	0.032
65.00	-4.74	-0.39	0.00	-7.82	0.00	7.82	857.60	428.80	695.64	348.34	1.57	-0.24	0.028
70.00	-4.63	-0.39	0.00	-5.85	0.00	5.85	826.01	413.00	636.49	318.72	1.84	-0.26	0.024
72.00	-3.18	-0.30	0.00	-5.07	0.00	5.07	813.05	406.52	613.31	307.11	1.95	-0.27	0.020
75.00	-2.85	-0.27	0.00	-4.18	0.00	4.18	787.55	393.77	574.90	287.88	2.12	-0.28	0.018
75.00	-2.85	-0.27	0.00	-4.18	0.00	4.18	654.06	327.03	470.04	305.83	2.12	-0.28	0.018
80.00	-2.78	-0.27	0.00	-2.81	0.00	2.81	654.06	327.03	470.04	305.83	2.42	-0.29	0.013
81.00	-2.07	-0.21	0.00	-2.54	0.00	2.54	654.06	327.03	470.04	305.83	2.48	-0.29	0.011
85.00	-1.76	-0.18	0.00	-1.69	0.00	1.69	654.06	327.03	470.04	305.83	2.72	-0.29	0.008
85.00	-1.76	-0.18	0.00	-1.69	0.00	1.69	654.06	327.03	470.04	305.83	2.72	-0.29	0.008
90.00	-1.45	-0.15	0.00	-0.77	0.00	0.77	654.06	327.03	470.04	305.83	3.03	-0.29	0.005
95.00	0.00	-0.15	0.00	0.00	0.00	0.00	654.06	327.03	470.04	305.83	3.33	-0.29	0.000

© 2007 - 2015 by ATC IP LLC. All rights reserved.

Equivalent Modal Forces Analysis

(Based on ASCE7-10 Chapters 11, 12 & 15 and ANSI/TIA-G, section 2.7)

Spectral Response Acceleration for Short Period (S_s):	0.25
Spectral Response Acceleration at 1.0 Second Period (S_1):	0.09
Importance Factor (I_E):	1.00
Site Coefficient F_a:	1.60
Site Coefficient F_v	1.60
Response Modification Coefficient (R):	1.50
Design Spectral Response Acceleration at Short Period (S_{ds}):	0.27
Desing Spectral Response Acceleration at 1.0 Second Period (S_{d1}):	0.09
Period Based on Rayleigh Method (sec):	2.44
Redundancy Factor (p):	1.30

Load Case (1.2 + 0.2Sds) * DL + E EMAM Seismic Equivalent Modal Analysis Method

Segment	Height Above Base (ft)	Weight (lb)	a	b	c	Saz	Horizontal Force (lb)	Vertical Force (lb)
22	92.50	369	1.792	1.502	0.963	0.414	132	463
21	87.50	369	1.603	0.789	0.675	0.263	84	463
20	83.00	296	1.443	0.370	0.477	0.151	39	370
19	80.50	78	1.357	0.208	0.389	0.098	7	98
18	77.50	390	1.258	0.066	0.300	0.043	15	489
17	73.50	132	1.131	-0.051	0.207	-0.015	-2	165
16	71.00	121	1.056	-0.092	0.161	-0.044	-5	152
15	67.50	310	0.954	-0.118	0.110	-0.073	-20	388
14	62.50	320	0.818	-0.115	0.059	-0.092	-26	401
13	57.50	329	0.692	-0.085	0.028	-0.084	-24	413
12	52.50	339	0.577	-0.045	0.012	-0.048	-14	425
11	47.50	349	0.472	-0.006	0.006	0.006	2	438
10	42.50	359	0.378	0.025	0.007	0.052	16	450
9	37.50	369	0.294	0.047	0.013	0.077	25	463
8	32.50	379	0.221	0.060	0.020	0.085	28	475
7	29.24	117	0.179	0.065	0.026	0.085	9	147
6	26.74	524	0.150	0.068	0.030	0.084	38	657
5	22.50	488	0.106	0.071	0.036	0.081	34	611
4	17.50	501	0.064	0.072	0.041	0.078	34	628
3	12.50	514	0.033	0.069	0.041	0.075	33	645
2	7.50	528	0.012	0.057	0.033	0.066	30	661
1	2.50	541	0.001	0.027	0.015	0.038	18	678
RFS DB-T1-6Z-8AB-0Z	95.00	44	1.890	1.980	1.140	0.500	19	55
Kathrein 800 10735	95.00	172	1.890	1.980	1.140	0.500	75	216
Alcatel-Lucent RRH2X	95.00	132	1.890	1.980	1.140	0.500	57	165
Alcatel-Lucent RRH2x	95.00	170	1.890	1.980	1.140	0.500	74	213
Kathrein Scala 800 1	95.00	225	1.890	1.980	1.140	0.500	97	282
Flat Low Profile Pla	95.00	1,500	1.890	1.980	1.140	0.500	650	1,880
Andrew SBNH-1D6565C	81.00	730	1.374	0.236	0.405	0.108	68	914
Ericsson RRUS-11	81.00	825	1.374	0.236	0.405	0.108	77	1,034
Flat Light Sector Fr	81.00	1,200	1.374	0.236	0.405	0.108	113	1,504
Raycap DC6-48-60-18-	81.00	60	1.374	0.236	0.405	0.108	6	75
14" x 9" TTA	81.00	60	1.374	0.236	0.405	0.108	6	75
82" x 9" Panel	72.00	315	1.086	-0.078	0.178	-0.033	-9	395

© 2007 - 2015 by ATC IP LLC. All rights reserved.

TTA	72.00	90	1.086	-0.078	0.178	-0.033	-3	113
3' Grid Dish	72.00	40	1.086	-0.078	0.178	-0.033	-1	50
Round Low Profile Pl	72.00	1,500	1.086	-0.078	0.178	-0.033	-43	1,880
		14,786	37.145	15.734	13.230	4.748	1,639	18,531

Load Case (0.9 - 0.2Sds) * DL + E EMAM **Seismic (Reduced DL) Equivalent Modal Analysis Method**

Segment	Height Above Base (ft)	Weight (lb)	a	b	c	Saz	Horizontal Force (lb)	Vertical Force (lb)
22	92.50	369	1.792	1.502	0.963	0.414	132	313
21	87.50	369	1.603	0.789	0.675	0.263	84	313
20	83.00	296	1.443	0.370	0.477	0.151	39	250
19	80.50	78	1.357	0.208	0.389	0.098	7	66
18	77.50	390	1.258	0.066	0.300	0.043	15	330
17	73.50	132	1.131	-0.051	0.207	-0.015	-2	112
16	71.00	121	1.056	-0.092	0.161	-0.044	-5	103
15	67.50	310	0.954	-0.118	0.110	-0.073	-20	262
14	62.50	320	0.818	-0.115	0.059	-0.092	-26	271
13	57.50	329	0.692	-0.085	0.028	-0.084	-24	279
12	52.50	339	0.577	-0.045	0.012	-0.048	-14	287
11	47.50	349	0.472	-0.006	0.006	0.006	2	296
10	42.50	359	0.378	0.025	0.007	0.052	16	304
9	37.50	369	0.294	0.047	0.013	0.077	25	313
8	32.50	379	0.221	0.060	0.020	0.085	28	321
7	29.24	117	0.179	0.065	0.026	0.085	9	99
6	26.74	524	0.150	0.068	0.030	0.084	38	444
5	22.50	488	0.106	0.071	0.036	0.081	34	413
4	17.50	501	0.064	0.072	0.041	0.078	34	424
3	12.50	514	0.033	0.069	0.041	0.075	33	435
2	7.50	528	0.012	0.057	0.033	0.066	30	447
1	2.50	541	0.001	0.027	0.015	0.038	18	458
RFS DB-T1-6Z-8AB-0Z	95.00	44	1.890	1.980	1.140	0.500	19	37
Kathrein 800 10735	95.00	172	1.890	1.980	1.140	0.500	75	146
Alcatel-Lucent RRH2X	95.00	132	1.890	1.980	1.140	0.500	57	112
Alcatel-Lucent RRH2x	95.00	170	1.890	1.980	1.140	0.500	74	144
Kathrein Scala 800 1	95.00	225	1.890	1.980	1.140	0.500	97	190
Flat Low Profile Pla	95.00	1,500	1.890	1.980	1.140	0.500	650	1,270
Andrew SBNH-1D6565C	81.00	730	1.374	0.236	0.405	0.108	68	618
Ericsson RRUS-11	81.00	825	1.374	0.236	0.405	0.108	77	698
Flat Light Sector Fr	81.00	1,200	1.374	0.236	0.405	0.108	113	1,016
Raycap DC6-48-60-18-	81.00	60	1.374	0.236	0.405	0.108	6	51
14" x 9" TTA	81.00	60	1.374	0.236	0.405	0.108	6	51
82" x 9" Panel	72.00	315	1.086	-0.078	0.178	-0.033	-9	267
TTA	72.00	90	1.086	-0.078	0.178	-0.033	-3	76
3' Grid Dish	72.00	40	1.086	-0.078	0.178	-0.033	-1	34
Round Low Profile Pl	72.00	1,500	1.086	-0.078	0.178	-0.033	-43	1,270
		14,786	37.145	15.734	13.230	4.748	1,639	12,518

© 2007 - 2015 by ATC IP LLC. All rights reserved.

Load Case (1.2 + 0.2Sds) * DL + E EMAM **Seismic Equivalent Modal Analysis Method**

Calculated Forces

Seg Elev (ft)	Pu FY (-) (kips)	Vu FX (-) (kips)	Tu MY (ft-kips)	Mu MZ (ft-kips)	Mu MX (ft-kips)	Resultant Moment (ft-kips)	phi Pn (kips)	phi Vn (kips)	phi Tn (ft-kips)	phi Mn (ft-kips)	Total Deflect (in)	Rotation (deg)	Ratio
0.00	-17.85	-1.63	0.00	-145.50	0.00	145.50	1,746.41	873.21	2,301.86	1,152.64	0.00	0.00	0.136
5.00	-17.19	-1.62	0.00	-137.35	0.00	137.35	1,711.10	855.55	2,185.89	1,094.57	0.03	-0.06	0.136
10.00	-16.54	-1.60	0.00	-129.25	0.00	129.25	1,674.66	837.33	2,071.37	1,037.22	0.13	-0.12	0.134
15.00	-15.91	-1.59	0.00	-121.24	0.00	121.24	1,637.08	818.54	1,958.45	980.68	0.29	-0.19	0.133
20.00	-15.30	-1.57	0.00	-113.31	0.00	113.31	1,598.36	799.18	1,847.26	925.00	0.53	-0.26	0.132
25.00	-14.64	-1.54	0.00	-105.47	0.00	105.47	1,558.50	779.25	1,737.95	870.27	0.83	-0.33	0.131
28.48	-14.49	-1.54	0.00	-100.11	0.00	100.11	1,053.87	526.94	1,167.23	584.48	1.09	-0.38	0.185
30.00	-14.02	-1.52	0.00	-97.76	0.00	97.76	1,046.91	523.46	1,146.61	574.15	1.21	-0.40	0.184
35.00	-13.55	-1.52	0.00	-90.14	0.00	90.14	1,023.28	511.64	1,079.20	540.40	1.68	-0.49	0.180
40.00	-13.10	-1.52	0.00	-82.55	0.00	82.55	998.51	499.26	1,012.55	507.03	2.25	-0.59	0.176
45.00	-12.66	-1.54	0.00	-74.94	0.00	74.94	972.61	486.30	946.81	474.11	2.92	-0.69	0.171
50.00	-12.23	-1.57	0.00	-67.26	0.00	67.26	945.56	472.78	882.11	441.71	3.70	-0.79	0.165
55.00	-11.82	-1.61	0.00	-59.43	0.00	59.43	917.38	458.69	818.59	409.90	4.58	-0.89	0.158
60.00	-11.41	-1.65	0.00	-51.40	0.00	51.40	888.06	444.03	756.39	378.76	5.57	-0.99	0.149
65.00	-11.02	-1.68	0.00	-43.18	0.00	43.18	857.60	428.80	695.64	348.34	6.67	-1.09	0.137
70.00	-10.87	-1.69	0.00	-34.79	0.00	34.79	826.01	413.00	636.49	318.72	7.86	-1.19	0.122
72.00	-8.26	-1.70	0.00	-31.41	0.00	31.41	813.05	406.52	613.31	307.11	8.37	-1.23	0.112
75.00	-7.77	-1.68	0.00	-26.32	0.00	26.32	787.55	393.77	574.90	287.88	9.16	-1.28	0.101
75.00	-7.77	-1.68	0.00	-26.32	0.00	26.32	654.06	327.03	470.04	305.83	9.16	-1.28	0.098
80.00	-7.67	-1.68	0.00	-17.90	0.00	17.90	654.06	327.03	470.04	305.83	10.54	-1.35	0.070
81.00	-3.71	-1.28	0.00	-16.22	0.00	16.22	654.06	327.03	470.04	305.83	10.83	-1.36	0.059
85.00	-3.25	-1.18	0.00	-11.11	0.00	11.11	654.06	327.03	470.04	305.83	11.98	-1.38	0.041
85.00	-3.25	-1.18	0.00	-11.11	0.00	11.11	654.06	327.03	470.04	305.83	11.98	-1.38	0.041
90.00	-2.79	-1.04	0.00	-5.20	0.00	5.20	654.06	327.03	470.04	305.83	13.43	-1.39	0.021
95.00	0.00	-0.97	0.00	0.00	0.00	0.00	654.06	327.03	470.04	305.83	14.89	-1.40	0.000

© 2007 - 2015 by ATC IP LLC. All rights reserved.

Load Case (0.9 - 0.2Sds) * DL + E EMAM Seismic (Reduced DL) Equivalent Modal Analysis Method

Calculated Forces

Seg Elev (ft)	Pu FY (-) (kips)	Vu FX (-) (kips)	Tu MY (ft-kips)	Mu MZ (ft-kips)	Mu MX (ft-kips)	Resultant Moment (ft-kips)	phi Pn (kips)	phi Vn (kips)	phi Tn (ft-kips)	phi Mn (ft-kips)	Total Deflect (in)	Rotation (deg)	Ratio
0.00	-12.06	-1.63	0.00	-141.50	0.00	141.50	1,746.41	873.21	2,301.86	1,152.64	0.00	0.00	0.130
5.00	-11.61	-1.61	0.00	-133.37	0.00	133.37	1,711.10	855.55	2,185.89	1,094.57	0.03	-0.06	0.129
10.00	-11.17	-1.59	0.00	-125.32	0.00	125.32	1,674.66	837.33	2,071.37	1,037.22	0.13	-0.12	0.127
15.00	-10.75	-1.56	0.00	-117.38	0.00	117.38	1,637.08	818.54	1,958.45	980.68	0.29	-0.18	0.126
20.00	-10.33	-1.54	0.00	-109.56	0.00	109.56	1,598.36	799.18	1,847.26	925.00	0.51	-0.25	0.125
25.00	-9.89	-1.51	0.00	-101.86	0.00	101.86	1,558.50	779.25	1,737.95	870.27	0.81	-0.32	0.123
28.48	-9.79	-1.51	0.00	-96.60	0.00	96.60	1,053.87	526.94	1,167.23	584.48	1.06	-0.36	0.175
30.00	-9.47	-1.49	0.00	-94.31	0.00	94.31	1,046.91	523.46	1,146.61	574.15	1.18	-0.39	0.173
35.00	-9.15	-1.47	0.00	-86.88	0.00	86.88	1,023.28	511.64	1,079.20	540.40	1.63	-0.48	0.170
40.00	-8.85	-1.47	0.00	-79.51	0.00	79.51	998.51	499.26	1,012.55	507.03	2.18	-0.57	0.166
45.00	-8.55	-1.48	0.00	-72.16	0.00	72.16	972.61	486.30	946.81	474.11	2.83	-0.67	0.161
50.00	-8.26	-1.50	0.00	-64.76	0.00	64.76	945.56	472.78	882.11	441.71	3.58	-0.76	0.155
55.00	-7.98	-1.54	0.00	-57.24	0.00	57.24	917.38	458.69	818.59	409.90	4.43	-0.86	0.148
60.00	-7.70	-1.57	0.00	-49.55	0.00	49.55	888.06	444.03	756.39	378.76	5.38	-0.96	0.140
65.00	-7.44	-1.60	0.00	-41.69	0.00	41.69	857.60	428.80	695.64	348.34	6.44	-1.06	0.128
70.00	-7.33	-1.61	0.00	-33.69	0.00	33.69	826.01	413.00	636.49	318.72	7.60	-1.15	0.115
72.00	-5.57	-1.64	0.00	-30.47	0.00	30.47	813.05	406.52	613.31	307.11	8.09	-1.19	0.106
75.00	-5.24	-1.62	0.00	-25.56	0.00	25.56	787.55	393.77	574.90	287.88	8.85	-1.24	0.095
75.00	-5.24	-1.62	0.00	-25.56	0.00	25.56	654.06	327.03	470.04	305.83	8.85	-1.24	0.092
80.00	-5.17	-1.62	0.00	-17.46	0.00	17.46	654.06	327.03	470.04	305.83	10.19	-1.31	0.065
81.00	-2.50	-1.25	0.00	-15.84	0.00	15.84	654.06	327.03	470.04	305.83	10.46	-1.31	0.056
85.00	-2.19	-1.16	0.00	-10.86	0.00	10.86	654.06	327.03	470.04	305.83	11.57	-1.33	0.039
85.00	-2.19	-1.16	0.00	-10.86	0.00	10.86	654.06	327.03	470.04	305.83	11.57	-1.33	0.039
90.00	-1.88	-1.02	0.00	-5.08	0.00	5.08	654.06	327.03	470.04	305.83	12.98	-1.35	0.019
95.00	0.00	-0.97	0.00	0.00	0.00	0.00	654.06	327.03	470.04	305.83	14.39	-1.35	0.000

© 2007 - 2015 by ATC IP LLC. All rights reserved.

Analysis Summary

Load Case	Reactions Shear FX (kips)	Shear FZ (kips)	Axial FY (kips)	Moment MX (ft-kips)	Moment MY (ft-kips)	Moment MZ (ft-kips)	Max Usage Elev (ft)	Interaction Ratio
1.2D + 1.6W	12.10	0.00	17.70	0.00	0.00	945.20	28.48	1.05
0.9D + 1.6W	12.08	0.00	13.27	0.00	0.00	927.15	28.48	1.02
1.2D + 1.0Di + 1.0Wi	2.41	0.00	32.54	0.00	0.00	195.01	28.48	0.24
(1.2 + 0.2Sds) * DL + E ELFM	0.45	0.00	13.82	0.00	0.00	37.18	28.48	0.05
(1.2 + 0.2Sds) * DL + E EMAM	1.63	0.00	17.85	0.00	0.00	145.50	28.48	0.19
(0.9 - 0.2Sds) * DL + E ELFM	0.45	0.00	9.33	0.00	0.00	36.57	28.48	0.05
(0.9 - 0.2Sds) * DL + E EMAM	1.63	0.00	12.06	0.00	0.00	141.50	28.48	0.17
1.0D + 1.0W	3.36	0.00	14.78	0.00	0.00	259.86	28.48	0.30

Base/Flange Plate	Plate Type	***Baseplate***	
	Pole Diameter	32.325	in
	Pole Thickness	0.25	in
	Plate Diameter	45.5	in
	Plate Thickness	2	in
	Plate Fy	50	ksi
	Weld Length	0.3125	in
	ϕ_s Resistance	1219.27	k-in
	Applied	380.98	k-in
Stiffeners	#	***3***	***Show***
	Thickness	1	in
	Length	4	in
	Height	12	in
	Chamfer	0.5	in
	Offset Angle	0	°
	Fy	50	ksi

Bolts ●	#	***6***	
	Bolt Circle	39.5	in
	(R)adial / (S)quare	R	
	Diameter	2.25	in
	Hole Diameter	2.625	in
	Type	A615-75	
	Fy	75	ksi
	Fu	100	ksi
	ϕ_s Resistance	259.82	k
	Applied	194.13	k
Reinforcement ●	#	***0***	
Extra Bolts O	#	***0***	

Code Rev.	***G***
Moment	945.2 k-ft
Axial	17.7 k

Date	6/3/2015
Engineer	RDB
Site #	274392
Carrier	Verizon Wireless

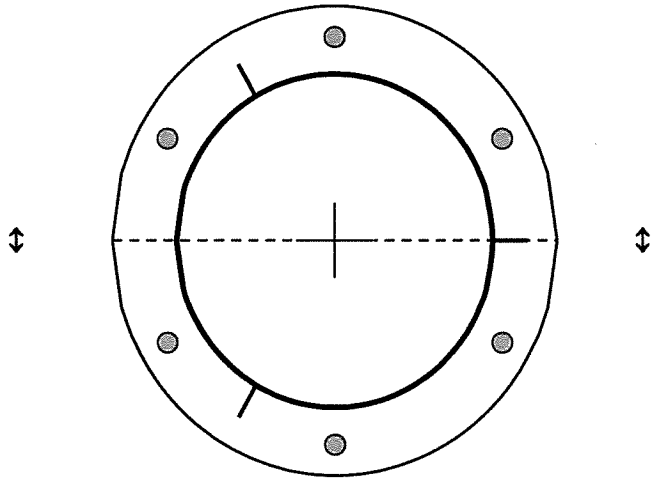

Plate Stress Ratio:
0.31 (Pass)

Bolt Stress Ratio:
0.75 (Pass)

Base/Flange Plate	Plate Type	*Flange @ 75.0 ft*	
	Pole Diameter	18	in
	Pole Thickness	0.375	in
	Plate Diameter	25	in
	Plate Thickness	1.5	in
	Plate Fy	50	ksi
	Weld Length	0.3125	in
	ϕ_s Resistance	104.13	k-in
	Applied	10.88	k-in
Stiffeners	#	*0*	

Bolts ●	#	*12*	
	Bolt Circle	21	in
	(R)adial / (S)quare	R	
	Diameter	1	in
	Hole Diameter	1.125	in
	Type	A325	
	Fy	92	ksi
	Fu	120	ksi
	ϕ_s Resistance	54.52	k
	Applied	17.41	k
Reinforcement ●	#	*0*	
Extra Bolts O	#	*0*	

Code Rev. **G**

Moment 94.6 k-ft
Axial 7.0 k

Date	6/3/2015
Engineer	RDB
Site #	274392
Carrier	Verizon Wireless

Required Flange Thickness:
0.48 in OK

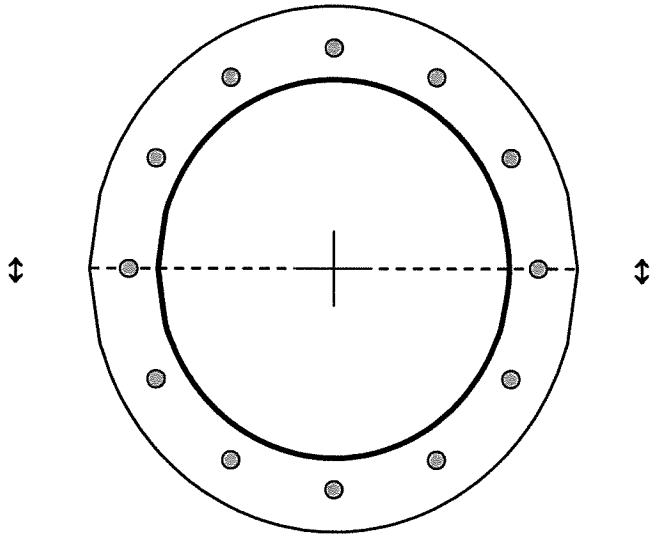

Plate Stress Ratio:
0.10 (Pass)

Bolt Stress Ratio:
0.32 (Pass)